BRUMBERG

Reduction ring for recessed lights

Article no. 81001070

Light.
For Generations.

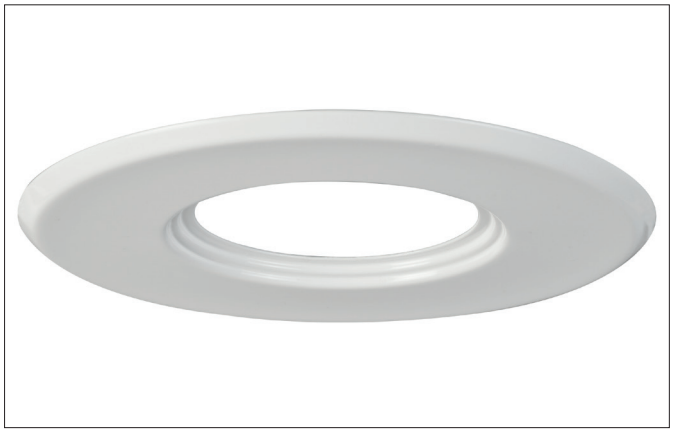

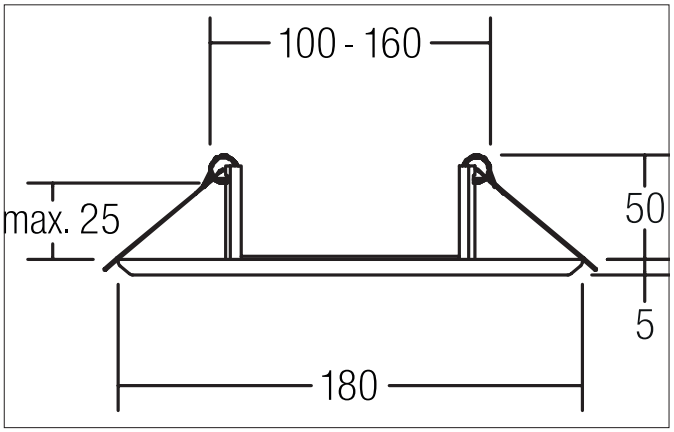

Tender
Reduction ring for recessed lights, glossy white, Round.Standard reduction ring for recessed spotlights with outside diameter 84 - 87 mm, as adapter for the ceiling cut-out 100 - 160 mm, diameter 180 mm, mounting height 5 mm, suitable for Brumberg spotlight 1963.. The final installation depth depends on the recessed spotlight used and the equipment of the lamp. Mechanical installation depth without lamp = 50 mm. Material: Steel, .

Article data	
Article no.	81001070
GTIN	4250047791065
Short description	Reduction ring for recessed lights
Material	Steel
Colour	White
Type of surface	Glossy
Shape	Round
Outer diameter	180 mm
Hight	5 mm
Weight	0.272 kg
Conformance	CE, UKCA

All technical data as well as, weight and measurements are based on rated values and had been carefully prepared. We reserve the right to make technical changes which are are important in progressing. Product pictures are examples and can vary from the original. Subject to errors.
Date 07.07.2024 Orders are placed under our general terms and conditions under https://www.brumberg.com/en/terms-and-conditions/general-terms-and-conditions-of-sale/

BRUMBERG

Reduction ring for recessed lights
Article no. 81001070

Light.
For Generations.

Packing data	
Gross weight	0.277 kg
Length of packaging	185 mm
Packaging width	45 mm
Packaging hight	185 mm
Disposal at end of life	This product must not be disposed of with household waste. You are obliged, to dispose of such electrical waste separately. By disposing of electrical waste and other old or defective electronics separately, you support recycling or other forms of re-use. In that way you help to take care and to avoid that harmful substances get into the environment.

All technical data as well as, weight and measurements are based on rated values and had been carefully prepared. We reserve the right to make technical changes which are are important in progressing. Product pictures are examples and can vary from the original. Subject to errors.
Date 07.07.2024 Orders are placed under our general terms and conditions under https://www.brumberg.com/en/terms-and-conditions/general-terms-and-conditions-of-sale/