BRUMBERG

KONKRET LED recessed downlight

Article no. 12114733

Light.
For Generations.



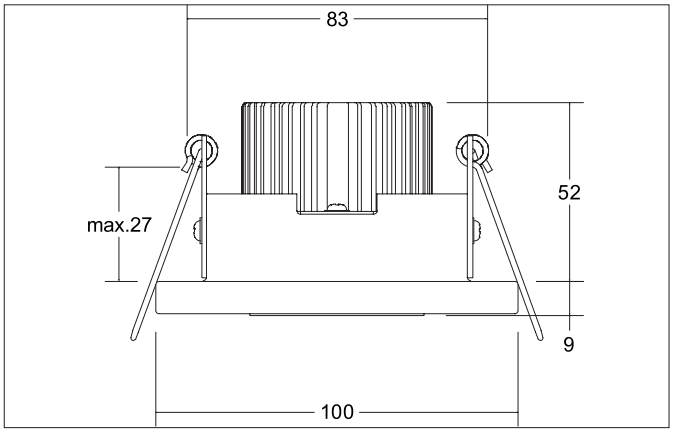

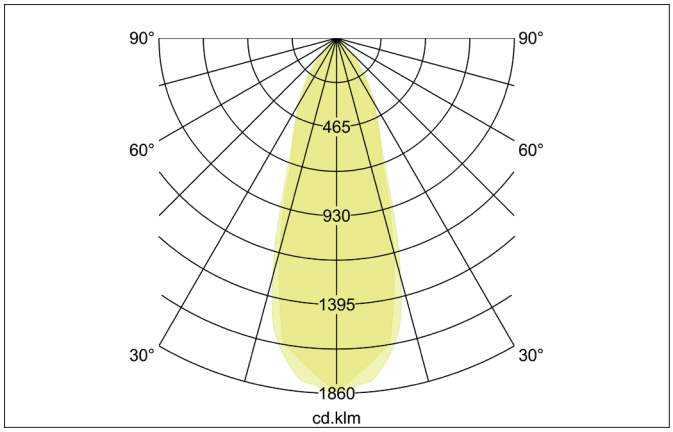



Tender
LED recessed downlight, Round.Toolless ceiling installation by installation springs. Ceiling cut-out Ø 83 mm, Installation depth 52 mm, Outer diameter 100 mm, Weight 0,360 kg, Reflector silver with rotattionssymmetrical, deep, wide distributed light intensity. Cover plastic, transparent. Luminous flux 520 lm, Power 1 x 6,8 W, Light colour warm white, Correlated color temprature (CCT) 3.000 K, Colour rendering index CRI > 90, Rated life time L70/B50 at 25 °C: 50.000 h, Housing material: Concrete / Aluminum / Plastic, Colour: Concrete, Permissible ambient temperature (ta): -20 °C - +25 °C, Protection class (EN 61140): III, Degree of protection (DIN EN 60529): IP20. For connection to an external driver, which is not included in the scope of delivery of the luminaire. Depending on driver dimmable.

Product Benefits

- Recessed downlight in round design made of solid concrete
- Ceiling cutout 83 mm, outer diameter 100 mm, mounting depth 52 mm, Height 9 mm, luminous flux 520 lm, IP20.
- Recessed light emission for improved glare control.
- Dimmable when using a suitable converter.
- With internal reflector high gloss silver.

All technical data as well as, weight and measurements are based on rated values and had been carefully prepared. We reserve the right to make technical changes which are are important in progressing. Product pictures are examples and can vary from the original. Subject to errors.
Date 26.08.2024 Orders are placed under our general terms and conditions under https://www.brumberg.com/en/terms-and-conditions/general-terms-and-conditions-of-sale/

BRUMBERG

KONKRET LED recessed downlight

Article no. 12114733

Light.
For Generations.

Article data	
Article no.	12114733
GTIN	4251433925774
Series name	KONKRET
Short description	LED recessed downlight
Material	Concrete / Aluminum / Plastic
Colour	Concrete
Type of surface	Matt
Shape	Round
Outer diameter	100 mm
Built-in diameter	83 mm
Installation depth	52 mm
Hight	9 mm
Weight	0.360 kg
Conformance	CE, UKCA

Lighting technology	
Colour temperature	3.000 K
Light colour	White
Light output	Direct
Luminous flux	520 lm
System efficiency	76 lm/W
McAdam-Step	McAdam-Step 3
Colour rendering	CRI > 90
Reflector	High-gloss
Reflector colour	silver
Beam angle	40°
Light sharing	Symmetric
Adjustable color temperature	No

Operating technology of the luminaire	
Voltage type	DC
Current	350 mA
Lamp	LED
Lamp holder	Plug&Play
Protection class	III
Degree of protection	IP20
Dimmable	Depending on type of control gear
Control	Depending on driver
Bulb change possible	The light source of this luminaire may only be replaced by the manufacturer or a service technician commissioned by him or a similarly qualified person.
Rated life time L70/B50 at 25 °C	50,000 h

Mounting technology	
Mounting method	Recessed mounting
Place of installation	Ceiling-mounted
Adjustability	Not adjustable
Max. ceiling thickness	27 mm
Further references	No cover with thermal insulation material
Material cover	Plastic, transparent

All technical data as well as, weight and measurements are based on rated values and had been carefully prepared. We reserve the right to make technical changes which are are important in progressing. Product pictures are examples and can vary from the original. Subject to errors.
Date 26.08.2024 Orders are placed under our general terms and conditions under https://www.brumberg.com/en/terms-and-conditions/general-terms-and-conditions-of-sale/

BRUMBERG

KONKRET LED recessed downlight
Article no. 12114733

Light.
For Generations.

Packing data	
Gross weight	0.515 kg
Length of packaging	165 mm
Packaging width	165 mm
Packaging hight	140 mm
Disposal at end of life	This product must not be disposed of with household waste. You are obliged, to dispose of such electrical waste separately. By disposing of electrical waste and other old or defective electronics separately, you support recycling or other forms of re-use. In that way you help to take care and to avoid that harmful substances get into the environment.

All technical data as well as, weight and measurements are based on rated values and had been carefully prepared. We reserve the right to make technical changes which are are important in progressing. Product pictures are examples and can vary from the original. Subject to errors.
Date 26.08.2024 Orders are placed under our general terms and conditions under https://www.brumberg.com/en/terms-and-conditions/general-terms-and-conditions-of-sale/

BRUMBERG

KONKRET LED recessed downlight
Article no. 12114733

Light.
For Generations.

Accessories
Article no.: 17662000 LED converter 350 mA, on/off switchable Power: 1 - 7,2 W Dimensions: 68 mm x 35 mm x 21 mm https://www.brumberg.com/fileadmin/products/Datenblatt_17662000_2021_DE.pdf
Article no.: 17613000 LED converter 350 mA, on/off switchable Power: 1 - 15 W Dimensions: 115 mm x 34 mm x 19 mm https://www.brumberg.com/fileadmin/products/Datenblatt_17613000_2021_DE.pdf
Article no.: 17621000 LED converter 350 mA, on/off switchable Power: 1 - 21 W Dimensions: 128 mm x 50 mm x 13 mm https://www.brumberg.com/fileadmin/products/Datenblatt_17621000_2021_DE.pdf
Article no.: 17640000 LED converter 350 mA, trailing-edge phase dimmable Power: 4,2 - 10 W Dimensions: 102 mm x 38 mm x 21 mm https://www.brumberg.com/fileadmin/products/Datenblatt_17640000_2021_DE.pdf
Article no.: 17657000 LED converter 350 mA, 1-10 V dimmable (analog) Power: 5,2 - 18 W Dimensions: 110 mm x 52 mm x 22 mm https://www.brumberg.com/fileadmin/products/Datenblatt_17657000_2021_DE.pdf
Article no.: 17683000 LED converter 350 mA, DALI dimmable (digital) Power: 3,5 - 17 W Dimensions: 110 mm x 52 mm x 22 mm https://www.brumberg.com/fileadmin/products/Datenblatt_17683000_2021_DE.pdf
Article no.: 17648000 LED converter 350 mA, trailing-edge phase dimmable Power: 0,7 - 17 W Dimensions: 166 mm x 46 mm x 34 mm https://www.brumberg.com/fileadmin/products/Datenblatt_17648000_2021_DE.pdf
Article no.: 17671000 LED converter 350mA, ZigBee dimmable Power: 3,5 - 18,5 W Dimensions: 146 mm x 44 mm x 30 mm https://www.brumberg.com/fileadmin/products/Datenblatt_17671000_2021_DE.pdf
Article no.: 17672000 LED converter 350mA, Casambi dimmable Power: 3,5 - 18 W Dimensions: 146 mm x 44 mm x 30 mm https://www.brumberg.com/fileadmin/products/Datenblatt_17672000_2021_DE.pdf
Article no.: 17663000 LED converter 350 mA, trailing-edge phase dimmable Power: 2,8 - 7 W Dimensions: 110 mm x 50 mm x 19 mm https://www.brumberg.com/fileadmin/products/Datenblatt_17663000_2021_DE.pdf

All technical data as well as, weight and measurements are based on rated values and had been carefully prepared. We reserve the right to make technical changes which are are important in progressing. Product pictures are examples and can vary from the original. Subject to errors.
Date 26.08.2024 Orders are placed under our general terms and conditions under https://www.brumberg.com/en/terms-and-conditions/general-terms-and-conditions-of-sale/