BRUMBERG

**DRAWER Recessed spot, GX5,3**
Article no. 1925.22

Light.
For Generations.



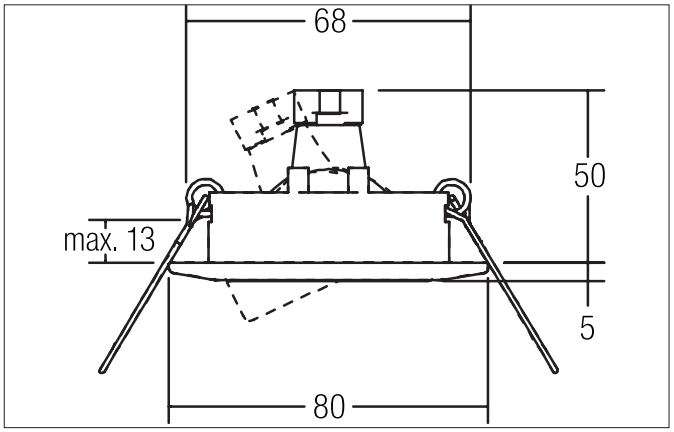


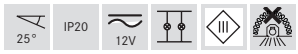


| Tender |
| --- |
| Recessed spot, GX5,3, stainless steel matt, Round.In a compact design, for installation in tool-less rapid assembly systems.Lamp holder: GX5.3, Mounting method: Recessed mounting, Place of installation: Ceiling-mounted, Material: Steel, Degree of protection: according to DIN EN 60529 IP20, Protection class: (EN 61140) III, Voltage: 12V, Power: 50 W, Amount of light sources / fittings: 1 Qty, Adjustability: Pivoted, without control gear, Dimmable: Depending on type of control gear, Control: Depending on driver. |

**Product Benefits**

- Recessed spotlight in round design made of steel for LED retrofit lamps with GX5.3 base.
- Ceiling cut-out 68 mm, diameter 80 mm, installation depth 50 mm, IP20.
- Pivoting range 25°.
- Version: without snap ring.
- Classic, formally restrained design.
- The cover can be removed for renovation.
- Also available as GU10 version in the same look.

All technical data as well as, weight and measurements are based on rated values and had been carefully prepared. We reserve the right to make technical changes which are are important in progressing. Product pictures are examples and can vary from the original. Subject to errors.
Date 16.07.2024 Orders are placed under our general terms and conditions under https://www.brumberg.com/en/terms-and-conditions/general-terms-and-conditions-of-sale/

BRUMBERG

## DRAWER Recessed spot, GX5,3

Article no. 1925.22

Light.
For Generations.

| Article data | |
|---|---|
| Article no. | 1925.22 |
| GTIN | 4250047711742 |
| Series name | DRAWER |
| Short description | Recessed spot, GX5,3 |
| Material | Stainless steel |
| Colour | Stainless steel |
| Type of surface | Matt |
| Shape | Round |
| Outer diameter | 80 mm |
| Built-in diameter | 68 mm |
| Installation depth | 50 mm |
| Hight | 5 mm |
| Weight | 0.073 kg |
| Conformance | CE, UKCA |

| Operating technology of the luminaire | |
|---|---|
| System output | 50 W |
| Voltage type | AC/DC |
| AC nominal voltage max | 12 V |
| Frequency max | 50 Hz |
| Lamp | For LED-retrofill lamp |
| Lamp holder | GX5.3 |
| Protection class | III |
| Degree of protection | IP20 |
| Dimmable | Depending on type of control gear |
| Control | Depending on driver |

| Mounting technology | |
|---|---|
| Mounting method | Recessed mounting |
| Place of installation | Ceiling-mounted |
| Adjustability | Pivoted |
| Swivel angle | 25° |
| Max. ceiling thickness | 13 mm |
| Further references | No cover with thermal insulation material |
| Material cover | Without cover |
| Circlip | Without circlip |

| Packing data | |
|---|---|
| Gross weight | 0.096 kg |
| Length of packaging | 85 mm |
| Packaging width | 43 mm |
| Packaging hight | 84 mm |
| Disposal at end of life | This product must not be disposed of with household waste. You are obliged, to dispose of such electrical waste separately.<br>By disposing of electrical waste and other old or defective electronics separately, you support recycling or other forms of re-use. In that way you help to take care and to avoid that harmful substances get into the environment. |

| Compatible LED-modules | | | | | | |
|---|---|---|---|---|---|---|

All technical data as well as, weight and measurements are based on rated values and had been carefully prepared. We reserve the right to make technical changes which are are important in progressing. Product pictures are examples and can vary from the original. Subject to errors.
Date 16.07.2024 Orders are placed under our general terms and conditions under https://www.brumberg.com/en/terms-and-conditions/general-terms-and-conditions-of-sale/