BRUMBERG

BB05 LED recessed spot set, trailing-edge phase dimmable (round converter)

Article no. 40365153

Light.
For Generations.



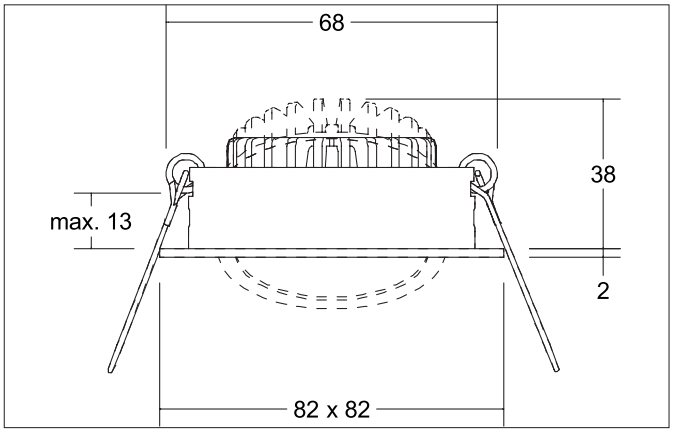

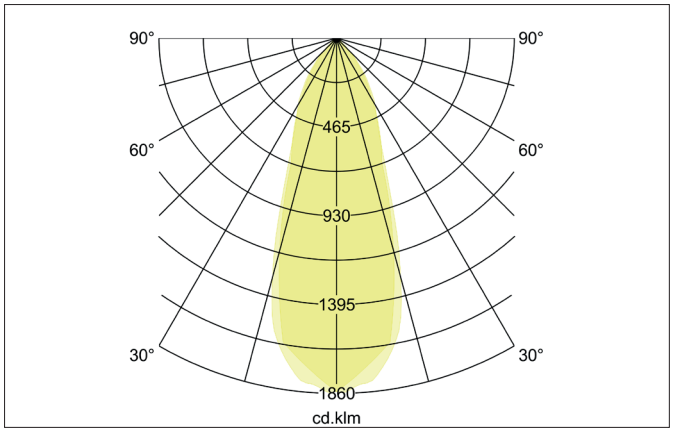

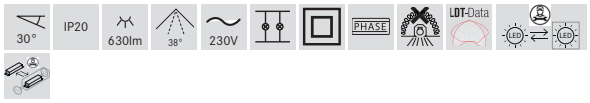

Tender
LED recessed spot set, trailing-edge phase dimmable (round converter), Square.Toolless ceiling installation by installation springs. Ceiling cut-out Ø 68 mm, Installation depth 38 mm, Length 82 mm, Width 82 mm, Weight 0,164 kg, Reflector silver with rotattionssymmetrical, deep, wide distributed light intensity. Cover polycarbonat clear. Luminous flux 630 lm, Power 1 x 6 W, Light colour warm white, Correlated color temprature (CCT) 3.000 K, Colour rendering index CRI > 80, Rated life time L80/B20 at 25 °C: 50.000 h, Housing material: Aluminium / Polycarbonate, Colour: Nickel, Permissible ambient temperature (ta): -20 °C - +25 °C, Protection class (EN 61140): II, Degree of protection (DIN EN 60529): IP20. With electronic driver, Trailing-edge phase dimmable.

Article data	
Article no.	40365153
GTIN	4251433916826
Series name	BB05
Short description	LED recessed spot set, trailing-edge phase dimmable (round converter)
Material	Aluminium / Polycarbonate
Colour	Nickel
Type of surface	Matt
Shape	Square
Built-in diameter	68 mm
Installation depth	38 mm
Length	82 mm
Width	82 mm
Hight	2 mm
Weight	0.164 kg
Conformance	CE, UKCA

All technical data as well as, weight and measurements are based on rated values and had been carefully prepared. We reserve the right to make technical changes which are are important in progressing. Product pictures are examples and can vary from the original. Subject to errors.
Date 02.08.2024 Orders are placed under our general terms and conditions under https://www.brumberg.com/en/terms-and-conditions/general-terms-and-conditions-of-sale/

BRUMBERG

BB05 LED recessed spot set, trailing-edge phase dimmable (round converter)

Article no. 40365153

Light.
For Generations.

Lighting technology	
Colour temperature	3.000 K
Light colour	White
Light output	Direct
Luminous flux	630 lm
System efficiency	105 lm/W
Colour rendering	CRI > 80
Reflector	High-gloss
Reflector colour	silver
Beam angle	38°
Light sharing	Symmetric
Adjustable color temperature	No

Operating technology of the luminaire	
Power	6 W
Voltage type	DC
Current	350 mA
Lamp	LED
Protection class	III
Degree of protection	IP20

Operating technology of driver	
Article No. of used driver	17652001
Power min	4.9 W
Power	7 W

Mounting technology	
Mounting method	Recessed mounting
Place of installation	Ceiling-mounted
Adjustability	Pivoted
Swivel angle	30°
Max. ceiling thickness	13 mm
Further references	No cover with thermal insulation material
Material cover	Polycarbonat clear
Suitable for through-wiring	Yes, with optional accessories

Packing data	
Gross weight	0.202 kg
Length of packaging	95 mm
Packaging width	75 mm
Packaging hight	95 mm
Disposal at end of life	This product must not be disposed of with household waste. You are obliged, to dispose of such electrical waste separately. By disposing of electrical waste and other old or defective electronics separately, you support recycling or other forms of re-use. In that way you help to take care and to avoid that harmful substances get into the environment.

All technical data as well as, weight and measurements are based on rated values and had been carefully prepared. We reserve the right to make technical changes which are are important in progressing. Product pictures are examples and can vary from the original. Subject to errors.
Date 02.08.2024 Orders are placed under our general terms and conditions under https://www.brumberg.com/en/terms-and-conditions/general-terms-and-conditions-of-sale/