BRUMBERG

BB38 LED recessed spot set, trailing-edge phase dimmable

Article no. 39399173

Light.
For Generations.



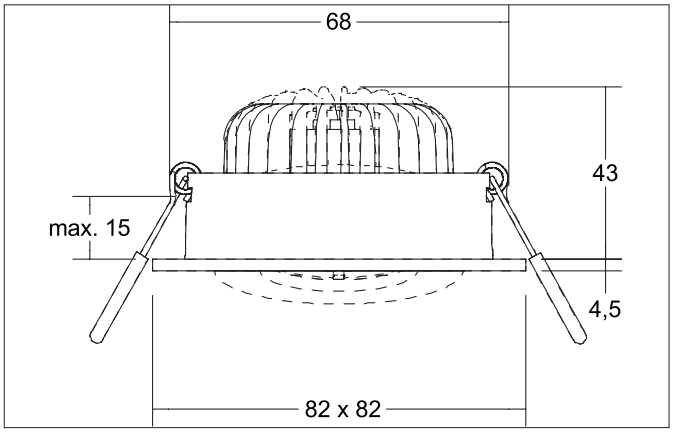

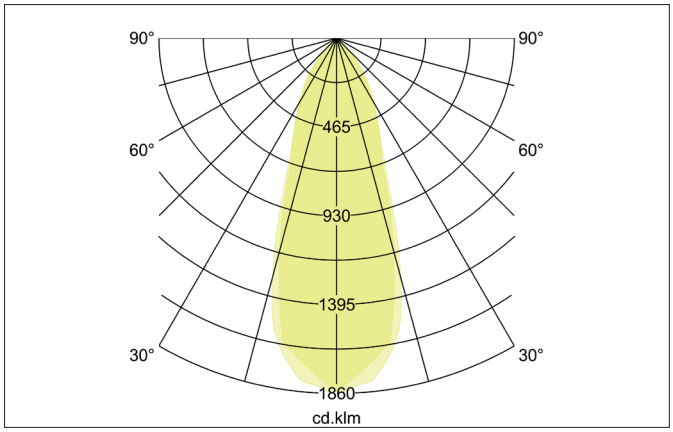

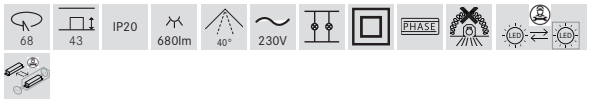

Tender
LED recessed spot set, trailing-edge phase dimmable, Square.Toolless ceiling installation by installation springs. Ceiling cut-out Ø 68 mm, Installation depth 43 mm, Length 82 mm, Width 82 mm, Weight 0,201 kg, Reflector silver with rotattionssymmetrical, deep, wide distributed light intensity. Cover polycarbonat clear. Luminous flux 680 lm, Power 1 x 7 W, Light colour warm white, Correlated color temprature (CCT) 3.000 K, Colour rendering index CRI > 80, Rated life time L70/B50 at 25 °C: 50.000 h, Housing material: Aluminium / Plastic, Colour: White, Permissible ambient temperature (ta): -20 °C - +25 °C, Protection class (EN 61140): II, Degree of protection (DIN EN 60529): IP20. With electronic driver, Trailing-edge phase dimmable.

Article data	
Article no.	39399173
GTIN	4251433953166
Series name	BB38
Short description	LED recessed spot set, trailing-edge phase dimmable
Material	Aluminium / Plastic
Colour	White
Shape	Square
Built-in diameter	68 mm
Installation depth	43 mm
Length	82 mm
Width	82 mm
Hight	4.5 mm
Weight	0.201 kg
Conformance	CE, UKCA

All technical data as well as, weight and measurements are based on rated values and had been carefully prepared. We reserve the right to make technical changes which are are important in progressing. Product pictures are examples and can vary from the original. Subject to errors.
Date 06.08.2024 Orders are placed under our general terms and conditions under https://www.brumberg.com/en/terms-and-conditions/general-terms-and-conditions-of-sale/

BRUMBERG

BB38 LED recessed spot set, trailing-edge phase dimmable

Article no. 39399173

Light.
For Generations.

Lighting technology	
Colour temperature	3.000 K
Light colour	White
Light output	Direct
Luminous flux	680 lm
System efficiency	97 lm/W
Colour rendering	CRI > 80
Reflector	High-gloss
Reflector colour	silver
Beam angle	40°
Light sharing	Symmetric
Adjustable color temperature	No

Operating technology of the luminaire	

Operating technology of driver	
Article No. of used driver	17663010
Length	110 mm
Width	50 mm
Hight	19 mm
AC nominal voltage min	198 V
AC nominal voltage max	264 V
Frequency max	60 Hz
Dimmable	Yes
Control	Trailing-edge phase
Starting current	1A (15,2 µs)
Power min	2.8 W
Power	7 W
Output current	350 mA
Degree of protection	IP20
Protection class	II
Flicker-free	Yes

Mounting technology	
Mounting method	Recessed mounting
Place of installation	Ceiling-mounted
Adjustability	Pivoted
Swivel angle	20°
Max. ceiling thickness	15 mm
Further references	No cover with thermal insulation material
Material cover	Polycarbonat clear
Suitable for through-wiring	Yes, with optional accessories

Packing data	
Gross weight	0.242 kg
Length of packaging	95 mm
Packaging width	75 mm
Packaging hight	95 mm
Disposal at end of life	This product must not be disposed of with household waste. You are obliged, to dispose of such electrical waste separately. By disposing of electrical waste and other old or defective electronics separately, you support recycling or other forms of re-use. In that way you help to take care and to avoid that harmful substances get into the environment.

All technical data as well as, weight and measurements are based on rated values and had been carefully prepared. We reserve the right to make technical changes which are are important in progressing. Product pictures are examples and can vary from the original. Subject to errors.
Date 06.08.2024 Orders are placed under our general terms and conditions under https://www.brumberg.com/en/terms-and-conditions/general-terms-and-conditions-of-sale/