BRUMBERG

MANITO Light point, G4

Article no. 2030.02

Light.
For Generations.



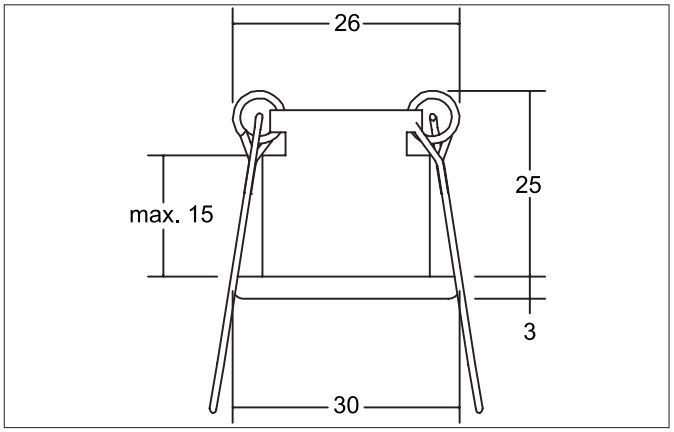

IP20 12V

Tender
Light point, G4, glossy chrome, Round.In a compact design, for installation in tool-less rapid assembly systems. Mounting method: Recessed mounting, Place of installation: Ceiling-mounted, Material: Cast iron, Degree of protection: according to DIN EN 60529 IP20, Protection class: (EN 61140) III, Voltage: 12V, Power: 20 W, Amount of light sources / fittings: 1 Qty, Adjustability: Not adjustable, without control gear, Dimmable: Depending on type of control gear, Control: Depending on driver.

Article data	
Article no.	2030.02
GTIN	4250047712985
Series name	MANITO
Short description	Light point, G4
Material	Cast iron
Colour	Chrome
Type of surface	Glossy
Shape	Round
Outer diameter	30 mm
Built-in diameter	26 mm
Installation depth	25 mm
Hight	3 mm
Weight	0.047 kg
Conformance	CE, UKCA

All technical data as well as, weight and measurements are based on rated values and had been carefully prepared. We reserve the right to make technical changes which are are important in progressing. Product pictures are examples and can vary from the original. Subject to errors.
Date 16.07.2024 Orders are placed under our general terms and conditions under https://www.brumberg.com/en/terms-and-conditions/general-terms-and-conditions-of-sale/

BRUMBERG

MANITO Light point, G4
Article no. 2030.02

Light.
For Generations.

Operating technology of the luminaire	
System output	20 W
Voltage type	AC
AC nominal voltage max	12 V
Frequency max	50 Hz
Lamp	LV halogen lamp
Lamp holder	G4
Protection class	III
Degree of protection	IP20
Dimmable	Depending on type of control gear
Control	Depending on driver
Bulb change possible	Yes

Mounting technology	
Mounting method	Recessed mounting
Place of installation	Ceiling-mounted
Adjustability	Not adjustable
Max. ceiling thickness	15 mm
Further references	No cover with thermal insulation material
Material cover	Without cover

Packing data	
Gross weight	0.062 kg
Length of packaging	70 mm
Packaging width	70 mm
Packaging hight	65 mm
Disposal at end of life	This product must not be disposed of with household waste. You are obliged, to dispose of such electrical waste separately. By disposing of electrical waste and other old or defective electronics separately, you support recycling or other forms of re-use. In that way you help to take care and to avoid that harmful substances get into the environment.

All technical data as well as, weight and measurements are based on rated values and had been carefully prepared. We reserve the right to make technical changes which are are important in progressing. Product pictures are examples and can vary from the original. Subject to errors.
Date 16.07.2024 Orders are placed under our general terms and conditions under https://www.brumberg.com/en/terms-and-conditions/general-terms-and-conditions-of-sale/