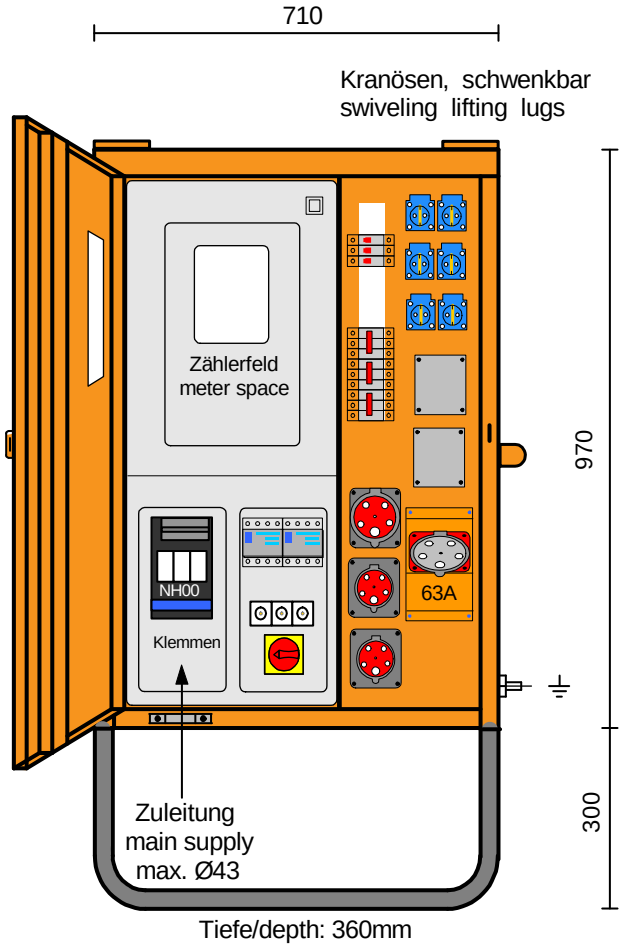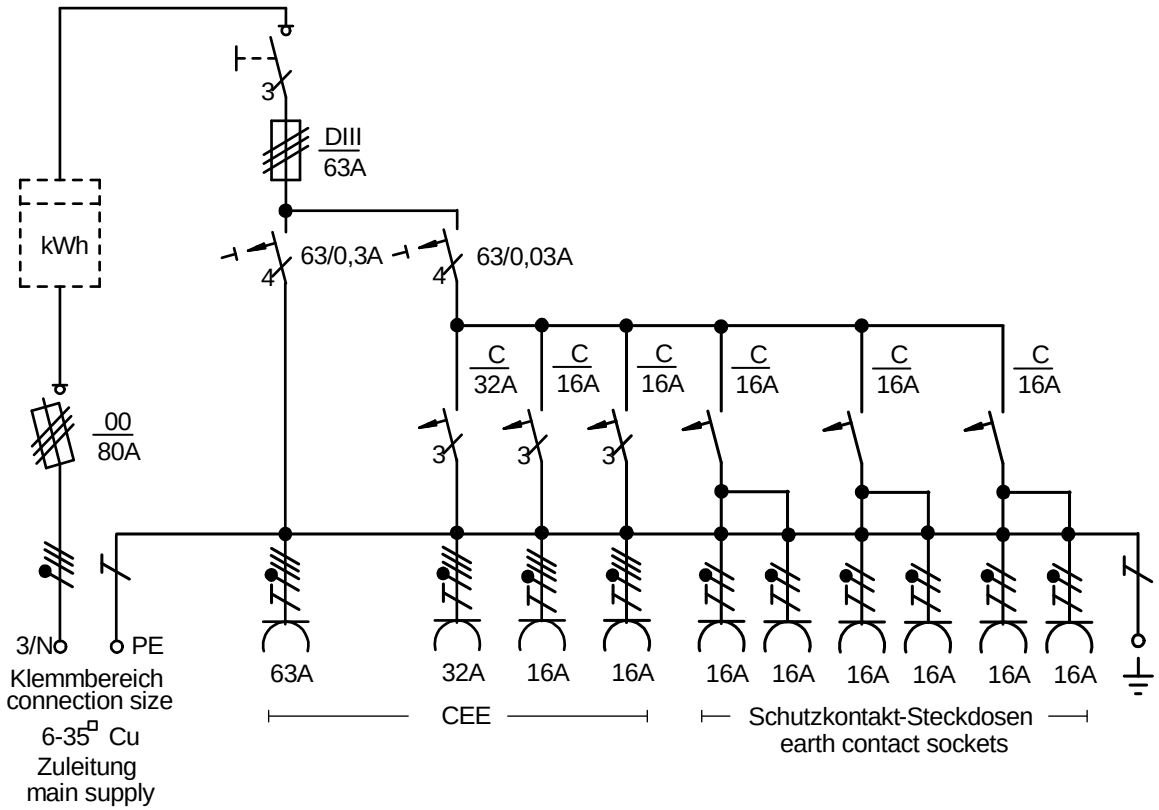Typ: **M-AVEV 63/211/6/V2** **Art.Nr.:** **MZ69007**