BRUMBERG

LED recessed spot

Article no. 12281153

Light.
For Generations.



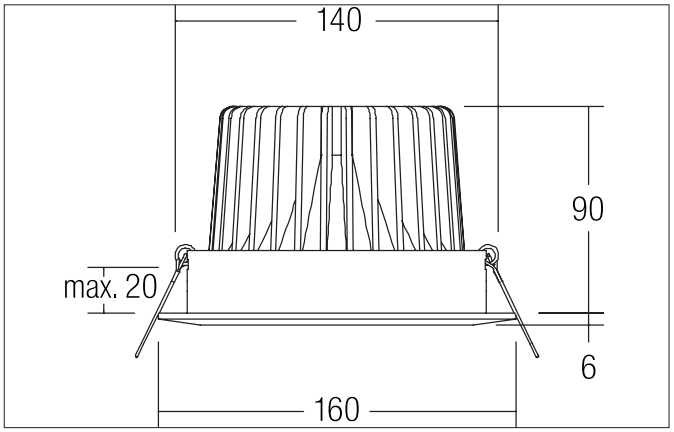

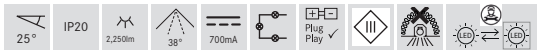

Tender
LED recessed spot, Round. Ceiling cut-out Ø 140 mm, Installation depth 90 mm, Outer diameter 160 mm, Weight 0,626 kg, with rotatti-onssymmetrical, deep, wide distributed light intensity. Cover glass transparent. Luminous flux 2.250 lm, Power 1 x 26 W, Light colour warm white, Correlated color temprature (CCT) 2.700 K, Colour rendering index CRI > 80, Housing material: Aluminium / Glass, Colour: Nickel, Permissible ambient temperature (ta): -20 °C - +25 °C, Protection class (EN 61140): III, Degree of protection (DIN EN 60529): IP20. For connection to an external driver, which is not included in the scope of delivery of the luminaire. Depending on driver dimmable.

Article data	
Article no.	12281153
GTIN	4250047797098
Short description	LED recessed spot
Material	Aluminium / Glass
Colour	Nickel
Type of surface	Matt
Shape	Round
Outer diameter	160 mm
Built-in diameter	140 mm
Installation depth	90 mm
Weight	0.626 kg
Conformance	CE, UKCA

All technical data as well as, weight and measurements are based on rated values and had been carefully prepared. We reserve the right to make technical changes which are are important in progressing. Product pictures are examples and can vary from the original. Subject to errors.
Date 08.08.2024 Orders are placed under our general terms and conditions under https://www.brumberg.com/en/terms-and-conditions/general-terms-and-conditions-of-sale/

BRUMBERG

LED recessed spot
Article no. 12281153

Light.
For Generations.

Lighting technology	
Colour temperature	2.700 K
Light colour	White
Light output	Direct
Luminous flux	2,250 lm
System efficiency	87 lm/W
Colour rendering	CRI > 80
Reflector	High-gloss
Beam angle	38°
Light sharing	Symmetric
Adjustable color temperature	No

Operating technology of the luminaire	
System output	24 W
Voltage type	DC
Current	700 mA
Lamp	LED
Lamp holder	Plug&Play
Protection class	III
Degree of protection	IP20
Control	Depending on driver
Bulb change possible	The light source of this luminaire may only be replaced by the manufacturer or a service technician commissioned by him or a similarly qualified person.

Mounting technology	
Mounting method	Recessed mounting
Place of installation	Ceiling-mounted
Adjustability	Pivoted
Swivel angle	25°
Further references	No mounting box No cover with thermal insulation material
Material cover	Glass transparent

Packing data	
Gross weight	0.832 kg
Length of packaging	210 mm
Packaging width	110 mm
Packaging hight	220 mm
Disposal at end of life	This product must not be disposed of with household waste. You are obliged, to dispose of such electrical waste separately. By disposing of electrical waste and other old or defective electronics separately, you support recycling or other forms of re-use. In that way you help to take care and to avoid that harmful substances get into the environment.

All technical data as well as, weight and measurements are based on rated values and had been carefully prepared. We reserve the right to make technical changes which are are important in progressing. Product pictures are examples and can vary from the original. Subject to errors.
Date 08.08.2024 Orders are placed under our general terms and conditions under https://www.brumberg.com/en/terms-and-conditions/general-terms-and-conditions-of-sale/

BRUMBERG

LED recessed spot
Article no. 12281153

Light.
For Generations.

Accessories	
	Article no.: 17723020 LED converter 700 mA, on/off switchable Power: 1,4 - 31 W Dimensions: 146 mm x 43.5 mm x 30 mm
	Article no.: 17748020 LED converter 700 mA, trailing-edge phase dimmable Power: 1,4 - 32 W Dimensions: 166 mm x 46 mm x 34 mm
	Article no.: 17777000 LED converter 700 mA, 1-10 V dimmable (analog) Power: 7 - 36 W Dimensions: 146 mm x 43.5 mm x 30 mm
	Article no.: 17788020 LED converter 700 mA, DALI dimmable (digital) Power: 7 - 38 W Dimensions: 146 mm x 44 mm x 30 mm
	Article no.: 17771020 LED converter 700mA, ZigBee dimmable Power: 7 - 36 W Dimensions: 146 mm x 44 mm x 30 mm
	Article no.: 17772020 LED converter 700mA, Casambi dimmable Power: 7 - 38 W Dimensions: 146 mm x 44 mm x 30 mm

All technical data as well as, weight and measurements are based on rated values and had been carefully prepared. We reserve the right to make technical changes which are are important in progressing. Product pictures are examples and can vary from the original. Subject to errors.
Date 08.08.2024 Orders are placed under our general terms and conditions under https://www.brumberg.com/en/terms-and-conditions/general-terms-and-conditions-of-sale/