BRUMBERG

FLAT30 LED recessed panel

Article no. 12217684

Light.
For Generations.



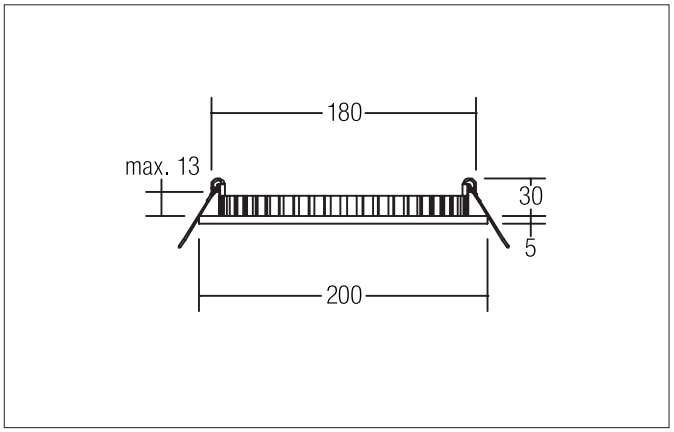

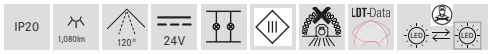

Tender
LED recessed panel, Round.Toolless ceiling installation by installation springs. Ceiling cut-out Ø 180 mm, Installation depth 30 mm, Outer diameter 200 mm, Weight 0,336 kg, with rotattionssymmetrical, deep, wide distributed light intensity. Cover plastic, opal. Luminous flux 1.080 lm, Power 1 x 16 W, Light colour neutral white, Correlated color temprature (CCT) 4.000 K, Colour rendering index CRI > 80, Housing material: Aluminium / Plastic, Colour: Silver, Permissible ambient temperature (ta): -20 °C - +25 °C, Protection class (EN 61140): III, Degree of protection (DIN EN 60529): IP20. For connection to an external driver, which is not included in the scope of delivery of the luminaire. Depending on driver dimmable.

Article data	
Article no.	12217684
GTIN	4251433915621
Series name	FLAT30
Short description	LED recessed panel
Material	Aluminium / Plastic
Colour	Silver
Type of surface	Matt
Shape	Round
Outer diameter	200 mm
Built-in diameter	180 mm
Installation depth	30 mm
Hight	5 mm
Weight	0.336 kg
Conformance	CE, UKCA

All technical data as well as, weight and measurements are based on rated values and had been carefully prepared. We reserve the right to make technical changes which are are important in progressing. Product pictures are examples and can vary from the original. Subject to errors.
Date 06.08.2024 Orders are placed under our general terms and conditions under https://www.brumberg.com/en/terms-and-conditions/general-terms-and-conditions-of-sale/

BRUMBERG

FLAT30 LED recessed panel

Article no. 12217684

Light.
For Generations.

Lighting technology	
Colour temperature	4.000 K
Light colour	White
Light output	Direct
Luminous flux	1,080 lm
System efficiency	68 lm/W
Colour rendering	CRI > 80
Reflector	Without
Beam angle	120°
Light sharing	Symmetric
Adjustable color temperature	No

Operating technology of the luminaire	
System output	16 W
Voltage type	DC
DC nominal voltage max	24 V
Lamp	LED
Lamp holder	Without fitting
Protection class	III
Degree of protection	IP20
Dimmable	Yes
Control	Depending on driver
Bulb change possible	The light source of this luminaire may only be replaced by the manufacturer or a service technician commissioned by him or a similarly qualified person.

Mounting technology	
Mounting method	Recessed mounting
Place of installation	Ceiling-mounted
Adjustability	Not adjustable
Max. ceiling thickness	13 mm
Further references	No cover with thermal insulation material
Material cover	Plastic, opal

Packing data	
Gross weight	0.514 kg
Length of packaging	250 mm
Packaging width	225 mm
Packaging hight	60 mm
Disposal at end of life	This product must not be disposed of with household waste. You are obliged, to dispose of such electrical waste separately. By disposing of electrical waste and other old or defective electronics separately, you support recycling or other forms of re-use. In that way you help to take care and to avoid that harmful substances get into the environment.

All technical data as well as, weight and measurements are based on rated values and had been carefully prepared. We reserve the right to make technical changes which are are important in progressing. Product pictures are examples and can vary from the original. Subject to errors.
Date 06.08.2024 Orders are placed under our general terms and conditions under https://www.brumberg.com/en/terms-and-conditions/general-terms-and-conditions-of-sale/

BRUMBERG

FLAT30 LED recessed panel
Article no. 12217684

Light.
For Generations.

Accessories	
	Article no.: 17206000 LED power supply 24 V DC, 1-10 V dimmable (analog) Power: 1 - 20 W Dimensions: 145 mm x 55 mm x 19 mm
	Article no.: 17207000 LED power supply 24 V DC, on/off switchable Power: 1 - 30 W Dimensions: 160 mm x 50 mm x 22 mm
	Article no.: 17223000 LED power supply 24 V DC, on/off switchable Power: 1 - 75 W Dimensions: 185 mm x 60 mm x 31 mm
	Article no.: 17224000 LED power supply 24 V DC, on/off switchable Power: 1 - 100 W Dimensions: 199 mm x 63 mm x 36 mm
	Article no.: 17225000 LED power supply 24 V DC, on/off switchable Power: 1 - 150 W Dimensions: 219 mm x 63 mm x 36 mm
	Article no.: 17226000 LED power supply 24V DC, on/off switchable Power: 1 - 240 W Dimensions: 244 mm x 71 mm x 38 mm
	Article no.: 17240000 LED power supply 24 V DC, on/off switchable Power: 1 - 20 W Dimensions: 150 mm x 40 mm x 30 mm
	Article no.: 17241000 LED power supply 24 V DC, on/off switchable Power: 1 - 40 W Dimensions: 210 mm x 40 mm x 30 mm
	Article no.: 17242000 LED power supply 24 V DC, on/off switchable Power: 1 - 60 W Dimensions: 250 mm x 40 mm x 30 mm
	Article no.: 17243000 LED power supply 24 V DC, on/off switchable Power: 1 - 120 W Dimensions: 300 mm x 40 mm x 30 mm

All technical data as well as, weight and measurements are based on rated values and had been carefully prepared. We reserve the right to make technical changes which are are important in progressing. Product pictures are examples and can vary from the original. Subject to errors.
Date 06.08.2024 Orders are placed under our general terms and conditions under https://www.brumberg.com/en/terms-and-conditions/general-terms-and-conditions-of-sale/

BRUMBERG

FLAT30 LED recessed panel
Article no. 12217684

Light.
For Generations.

Accessories	
	Article no.: 17244000 LED power supply 24 V DC, on/off switchable Power: 1 - 150 W Dimensions: 310 mm x 40 mm x 30 mm
	Article no.: 17230000 LED power supply 24 V DC, dimmable Power: 5 - 30 W Dimensions: 145 mm x 50 mm x 22 mm
	Article no.: 17231000 LED power supply 24 V DC, dimmable Power: 12 - 75 W Dimensions: 185 mm x 60 mm x 31 mm
	Article no.: 17232000 LED power supply 24 V DC, dimmable Power: 12 - 120 W Dimensions: 223 mm x 64 mm x 32 mm

All technical data as well as, weight and measurements are based on rated values and had been carefully prepared. We reserve the right to make technical changes which are are important in progressing. Product pictures are examples and can vary from the original. Subject to errors.
Date 06.08.2024 Orders are placed under our general terms and conditions under https://www.brumberg.com/en/terms-and-conditions/general-terms-and-conditions-of-sale/