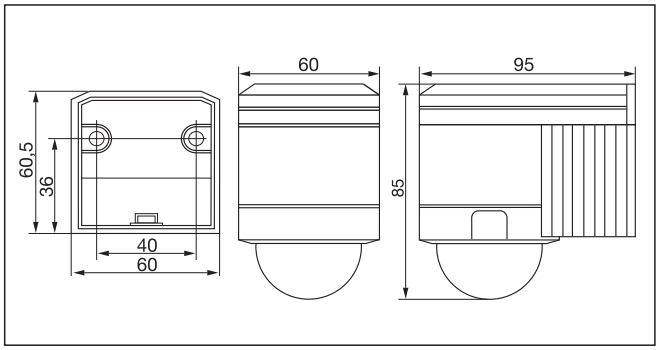
60
95
60,5
36
85
40
60

IS 300

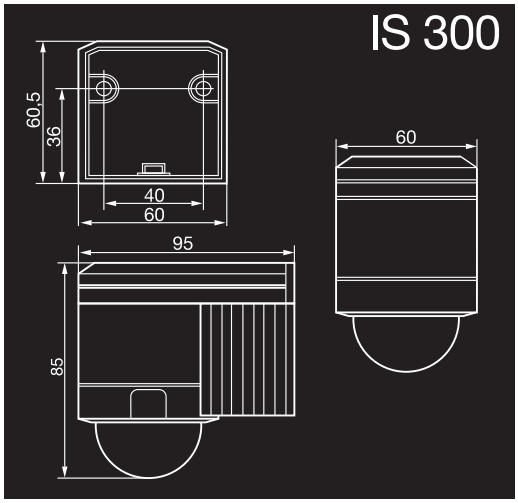
IS 300
60,5
36
40
60
60
95
85

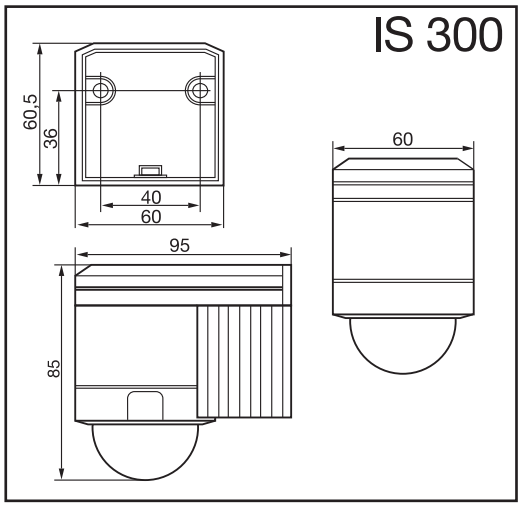
IS 300
60,5
36
40
60
60
95
85