BRUMBERG

LED reflector insert MR16, 6 W, dim2warm, 350 mA

Article no. 12963603

Light.
For Generations.

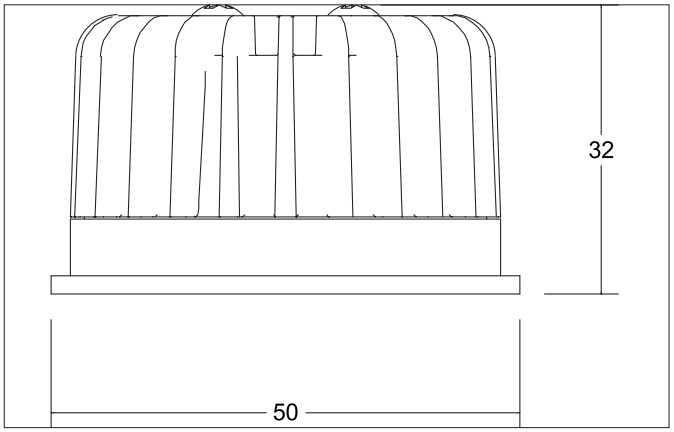

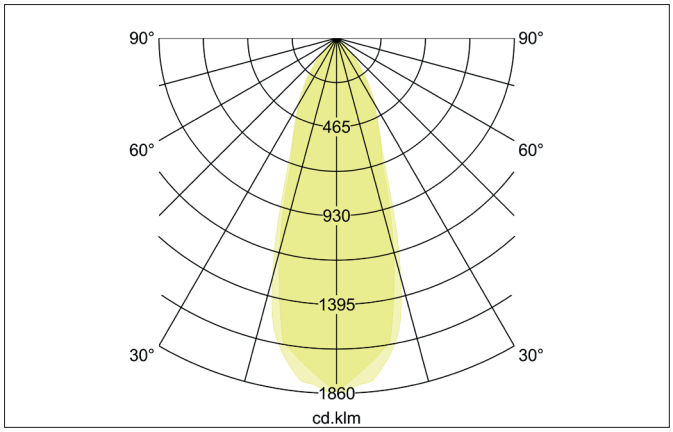

Tender
LED reflector insert MR16, 6 W, dim2warm, 350 mA, , Round.If the LED module is dimmed, the color temperature is reduced.Lamp holder: Plug&Play, Material: Aluminium / Glass, Degree of protection: according to DIN EN 60529 IP20, Protection class: (EN 61140) III, Current: 350 mA, Power: 6 W, Luminous flux : 460 lm, Colour temperature: from 3.000 K to 1.800 K, Light colour: White, Beam angle: 60°, Control: Depending on driver.

Article data	
Article no.	12963603
GTIN	4251433930198
Short description	LED reflector insert MR16, 6 W, dim2warm, 350 mA
Material	Aluminium / Glass
Shape	Round
Outer diameter	50 mm
Hight	32 mm
Weight	0.078 kg
Conformance	CE, UKCA

Lighting technology	
Colour temperature	3.000 K - 1.800 K
Light colour	White
Luminous flux	460 lm
Colour rendering	CRI > 90
Reflector	High-gloss
Beam angle	60°
Light sharing	Symmetric

All technical data as well as, weight and measurements are based on rated values and had been carefully prepared. We reserve the right to make technical changes which are are important in progressing. Product pictures are examples and can vary from the original. Subject to errors.
Date 12.08.2024 Orders are placed under our general terms and conditions under https://www.brumberg.com/en/terms-and-conditions/general-terms-and-conditions-of-sale/

BRUMBERG

LED reflector insert MR16, 6 W, dim2warm, 350 mA
Article no. 12963603

Light.
For Generations.

Operating technology of the luminaire	
Voltage type	DC
Current	350 mA
Lamp	LED
Lamp holder	Plug&Play
Protection class	III
Degree of protection	IP20
Control	Depending on driver
Bulb change possible	The light source of this luminaire may only be replaced by the manufacturer or a service technician commissioned by him or a similarly qualified person.
Rated life time L80/B20 at 25 °C	50.000 h

Packing data	
Gross weight	0.089 kg
Length of packaging	55 mm
Packaging width	55 mm
Packaging hight	65 mm
Disposal at end of life	This product must not be disposed of with household waste. You are obliged, to dispose of such electrical waste separately. By disposing of electrical waste and other old or defective electronics separately, you support recycling or other forms of re-use. In that way you help to take care and to avoid that harmful substances get into the environment.

Accessories	

All technical data as well as, weight and measurements are based on rated values and had been carefully prepared. We reserve the right to make technical changes which are are important in progressing. Product pictures are examples and can vary from the original. Subject to errors.
Date 12.08.2024 Orders are placed under our general terms and conditions under https://www.brumberg.com/en/terms-and-conditions/general-terms-and-conditions-of-sale/

BRUMBERG

LED reflector insert MR16, 6 W, dim2warm, 350 mA
Article no. 12963603

Light.
For Generations.

Required accessories	
	Article no.: 17663000 LED converter 350 mA, trailing-edge phase dimmable Power: 2,8 - 7 W Dimensions: 110 mm x 50 mm x 19 mm
	Article no.: 17663020 LED converter 350 mA, trailing-edge phase dimmable Power: 2,8 - 7 W Dimensions: 110 mm x 50 mm x 19 mm
	Article no.: 17652000 LED-round converter 350 mA, trailing-edge phase dimmer Power: 4,9 - 7 W Dimensions: 51 mm x 24 mm
	Article no.: 17652020 LED-round converter 350 mA, trailing-edge phase dimmer Power: 4,9 - 7 W Dimensions: 51 mm x 24 mm
	Article no.: 17640000 LED converter 350 mA, trailing-edge phase dimmable Power: 4,2 - 10 W Dimensions: 102 mm x 38 mm x 21 mm
	Article no.: 17640020 LED converter 350 mA, trailing-edge phase dimmable Power: 4,2 - 10 W Dimensions: 102 mm x 38 mm x 21 mm
	Article no.: 17657000 LED converter 350 mA, 1-10 V dimmable (analog) Power: 5,2 - 18 W Dimensions: 110 mm x 52 mm x 22 mm
	Article no.: 17683000 LED converter 350 mA, DALI dimmable (digital) Power: 3,5 - 17 W Dimensions: 110 mm x 52 mm x 22 mm
	Article no.: 17683020 LED converter 350 mA, DALI dimmable (digital) Power: 3,5 - 17 W Dimensions: 110 mm x 52 mm x 22 mm
	Article no.: 17684000 LED converter 350 mA, DALI dimmable (digital) Power: 2,8 - 7 W Dimensions: 130 mm x 42 mm x 22 mm

All technical data as well as, weight and measurements are based on rated values and had been carefully prepared. We reserve the right to make technical changes which are are important in progressing. Product pictures are examples and can vary from the original. Subject to errors.
Date 12.08.2024 Orders are placed under our general terms and conditions under https://www.brumberg.com/en/terms-and-conditions/general-terms-and-conditions-of-sale/