BRUMBERG

LAKIL-S LED recessed spot set, dim2warm, trailing-edge phase dimmable

Article no. 39462253

Light.
For Generations.

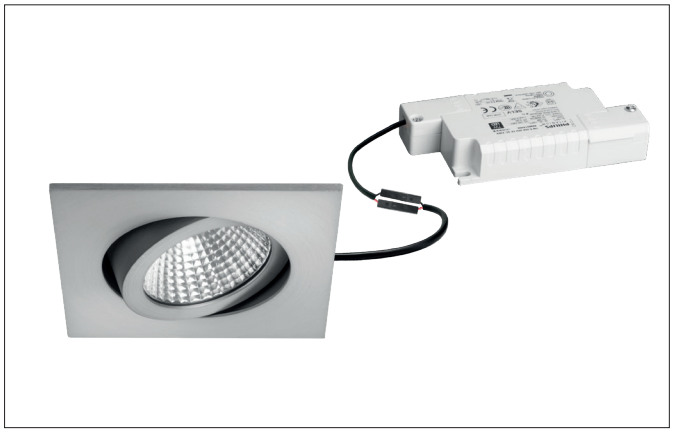

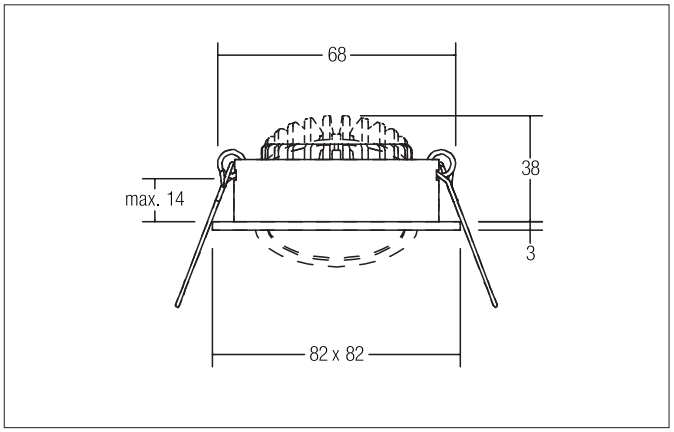

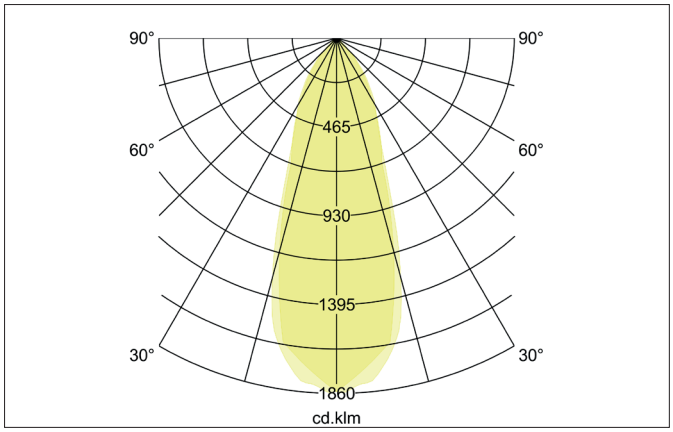

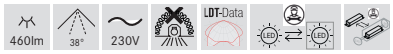

Tender
LED recessed spot set, dim2warm, trailing-edge phase dimmable, Square.Toolless ceiling installation by installation springs. Ceiling cut-out Ø 68 mm, Installation depth 38 mm, Length 82 mm, Width 82 mm, Weight 0,210 kg, Reflector silver with rotattionssymmetrical, deep, wide distributed light intensity. Cover plastic, transparent. Luminous flux 460 lm, Power 1 x 6 W, Light colour warm white to warm white, Correlated color temprature (CCT) 3.000 K - 1.800 K, Colour rendering index CRI > 90, Rated life time L80/B20 at 25 °C: 50.000 h, Housing material: Aluminium / Polycarbonate, Colour: Alu, Permissible ambient temperature (ta): -20 °C - +25 °C, Protection class (EN 61140): II, Degree of protection (DIN EN 60529): IP20. With electronic driver, Trailing-edge phase dimmable.

Product Benefits

- Square recessed spotlight made of solid aluminum with polycarbonate cover.
- Easy and tool-free mounting.
- CRI > 80.
- Low mounting depth 38 mm, length 82 mm, width 82 mm, Ceiling cut-out 68 mm.
- Ceiling thickness maximum 14 mm.
- Version dim2warm (when the luminaire is dimmed, the color temperature is reduced from 3,000 K to a minimum of 1,800 K).
- Dimmable (trailing-edge phase dimmer) set.
- Also available as single luminaire for current supply with 350 mA.
- Alternatively available in round design.

All technical data as well as, weight and measurements are based on rated values and had been carefully prepared. We reserve the right to make technical changes which are are important in progressing. Product pictures are examples and can vary from the original. Subject to errors.
Date 06.08.2024 Orders are placed under our general terms and conditions under https://www.brumberg.com/en/terms-and-conditions/general-terms-and-conditions-of-sale/

BRUMBERG

LAKIL-S LED recessed spot set, dim2warm, trailing-edge phase dimmable

Article no. 39462253

Light.
For Generations.

Article data	
Article no.	39462253
GTIN	4251433919551
Series name	LAKIL-S
Short description	LED recessed spot set, dim2warm, trailing-edge phase dimmable
Material	Aluminium / Polycarbonate
Colour	Alu
Type of surface	Matt
Shape	Square
Built-in diameter	68 mm
Installation depth	38 mm
Length	82 mm
Width	82 mm
Hight	3 mm
Weight	0.210 kg
Conformance	CE, UKCA

Lighting technology	
Colour temperature	3.000 K - 1.800 K
Light colour	White
Light output	Direct
Luminous flux	460 lm
System efficiency	77 lm/W
Colour rendering	CRI > 90
Reflector	High-gloss
Reflector colour	silver
Beam angle	38°
Light sharing	Symmetric
Adjustable color temperature	Infinite control

Operating technology of the luminaire	
Hight	3 mm
Lamp holder	Plug&Play
Power	6 W
Voltage type	DC
Current	350 mA
Lamp	LED
Protection class	III
Degree of protection	IP20
Bulb change possible	The light source of this luminaire may only be replaced by the manufacturer or a service technician commissioned by him or a similarly qualified person.

All technical data as well as, weight and measurements are based on rated values and had been carefully prepared. We reserve the right to make technical changes which are are important in progressing. Product pictures are examples and can vary from the original. Subject to errors.
Date 06.08.2024 Orders are placed under our general terms and conditions under https://www.brumberg.com/en/terms-and-conditions/general-terms-and-conditions-of-sale/

BRUMBERG

LAKIL-S LED recessed spot set, dim2warm, trailing-edge phase dimmable

Article no. 39462253

Light.
For Generations.

Operating technology of driver	
Article No. of used driver	17663000
Length	110 mm
Width	50 mm
Hight	19 mm
AC nominal voltage min	198 V
AC nominal voltage max	264 V
Frequency max	60 Hz
Dimmable	Yes
Control	Trailing-edge phase
Starting current	1A (15,2 µs)
Power min	2.8 W
Power	7 W
Output current	350 mA
Degree of protection	IP20
Protection class	II
Flicker-free	Yes

Mounting technology	
Mounting method	Recessed mounting
Place of installation	Ceiling-mounted
Adjustability	Pivoted
Swivel angle	30°
Max. ceiling thickness	14 mm
Further references	No cover with thermal insulation material
Material cover	Plastic, transparent
Suitable for through-wiring	Yes, with optional accessories

Packing data	
Gross weight	0.269 kg
Length of packaging	95 mm
Packaging width	75 mm
Packaging hight	95 mm
Disposal at end of life	This product must not be disposed of with household waste. You are obliged, to dispose of such electrical waste separately. By disposing of electrical waste and other old or defective electronics separately, you support recycling or other forms of re-use. In that way you help to take care and to avoid that harmful substances get into the environment.

All technical data as well as, weight and measurements are based on rated values and had been carefully prepared. We reserve the right to make technical changes which are are important in progressing. Product pictures are examples and can vary from the original. Subject to errors.
Date 06.08.2024 Orders are placed under our general terms and conditions under https://www.brumberg.com/en/terms-and-conditions/general-terms-and-conditions-of-sale/