BRUMBERG

P32-12 Spring holder for cavity walls

Article no. 53032000

Light.
For Generations.



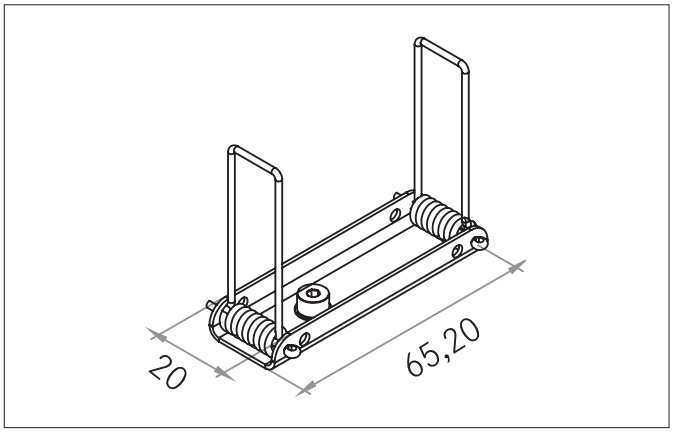

Tender
Spring holder for cavity walls, aluminium raw. Material: Steel, .

Article data	
Article no.	53032000
GTIN	4251433911517
Series name	P32-12
Short description	Spring holder for cavity walls
Material	Steel
Colour	Silver
Length	20 mm
Width	65.2 mm
Weight	0.019 kg
Conformance	CE, UKCA

Packing data	
Gross weight	0.02 kg
Length of packaging	120 mm
Packaging width	20 mm
Packaging hight	180 mm
Disposal at end of life	This product must not be disposed of with household waste. You are obliged, to dispose of such electrical waste separately. By disposing of electrical waste and other old or defective electronics separately, you support recycling or other forms of re-use. In that way you help to take care and to avoid that harmful substances get into the environment.

All technical data as well as, weight and measurements are based on rated values and had been carefully prepared. We reserve the right to make technical changes which are are important in progressing. Product pictures are examples and can vary from the original. Subject to errors.
Date 18.09.2024 Orders are placed under our general terms and conditions under https://www.brumberg.com/en/terms-and-conditions/general-terms-and-conditions-of-sale/