BRUMBERG

# BB05 LED recessed spot set, trailing-edge phase dimmable (round converter)

Article no. 40365183

Light.
For Generations.



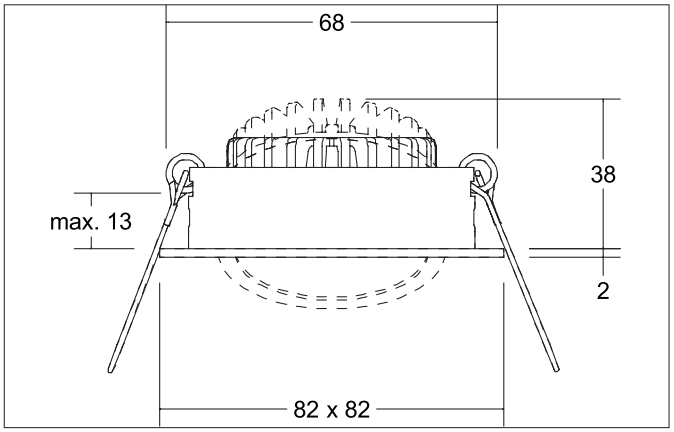


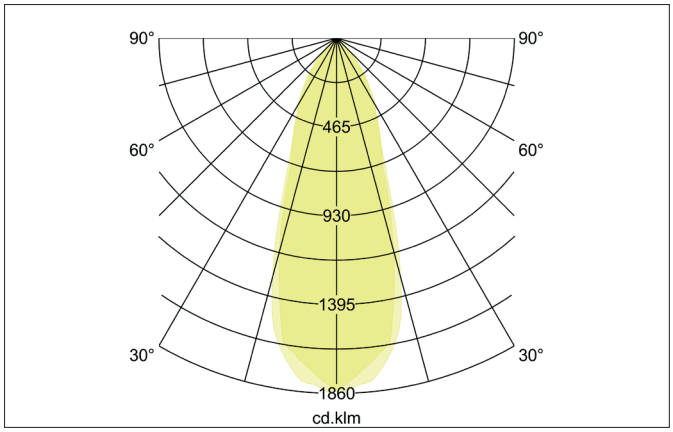


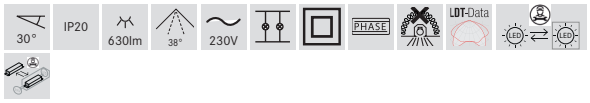




| Tender |
|---|
| LED recessed spot set, trailing-edge phase dimmable (round converter), Square.Toolless ceiling installation by installation springs. Ceiling cut-out Ø 68 mm, Installation depth 38 mm, Length 82 mm, Width 82 mm, Weight 0,164 kg, Reflector silver with rotattionssymmetrical, deep, wide distributed light intensity. Cover polycarbonat clear. Luminous flux 630 lm, Power 1 x 6 W, Light colour warm white, Correlated color temprature (CCT) 3.000 K, Colour rendering index CRI > 80, Rated life time L80/B20 at 25 °C: 50.000 h, Housing material: Aluminium / Polycarbonate, Colour: Black structure, Permissible ambient temperature (ta): -20 °C - +25 °C, Protection class (EN 61140): II, Degree of protection (DIN EN 60529): IP20. With electronic driver, Trailing-edge phase dimmable. |

| Article data | |
|---|---|
| Article no. | 40365183 |
| GTIN | 4251433954071 |
| Series name | BB05 |
| Short description | LED recessed spot set, trailing-edge phase dimmable (round converter) |
| Material | Aluminium / Polycarbonate |
| Colour | Black |
| Type of surface | Structure |
| Shape | Square |
| Built-in diameter | 68 mm |
| Installation depth | 38 mm |
| Length | 82 mm |
| Width | 82 mm |
| Hight | 2 mm |
| Weight | 0.164 kg |
| Conformance | CE, UKCA |

All technical data as well as, weight and measurements are based on rated values and had been carefully prepared. We reserve the right to make technical changes which are are important in progressing. Product pictures are examples and can vary from the original. Subject to errors.
Date 02.08.2024 Orders are placed under our general terms and conditions under https://www.brumberg.com/en/terms-and-conditions/general-terms-and-conditions-of-sale/

BRUMBERG

# BB05 LED recessed spot set, trailing-edge phase dimmable (round converter)

Article no. 40365183

Light.
For Generations.

| Lighting technology | |
|---|---|
| Colour temperature | 3.000 K |
| Light colour | White |
| Light output | Direct |
| Luminous flux | 630 lm |
| System efficiency | 105 lm/W |
| Colour rendering | CRI > 80 |
| Reflector | High-gloss |
| Reflector colour | silver |
| Beam angle | 38° |
| Light sharing | Symmetric |
| Adjustable color temperature | No |

| Operating technology of the luminaire | |
|---|---|
| Power | 6 W |
| Voltage type | DC |
| Current | 350 mA |
| Lamp | LED |
| Protection class | III |
| Degree of protection | IP20 |

| Operating technology of driver | |
|---|---|
| Article No. of used driver | 17652001 |
| Power min | 4.9 W |
| Power | 7 W |

| Mounting technology | |
|---|---|
| Mounting method | Recessed mounting |
| Place of installation | Ceiling-mounted |
| Adjustability | Pivoted |
| Swivel angle | 30° |
| Max. ceiling thickness | 13 mm |
| Further references | No cover with thermal insulation material |
| Material cover | Polycarbonat clear |
| Suitable for through-wiring | Yes, with optional accessories |

| Packing data | |
|---|---|
| Gross weight | 0.202 kg |
| Length of packaging | 95 mm |
| Packaging width | 75 mm |
| Packaging hight | 95 mm |
| Disposal at end of life | This product must not be disposed of with household waste. You are obliged, to dispose of such electrical waste separately.<br>By disposing of electrical waste and other old or defective electronics separately, you support recycling or other forms of re-use. In that way you help to take care and to avoid that harmful substances get into the environment. |

All technical data as well as, weight and measurements are based on rated values and had been carefully prepared. We reserve the right to make technical changes which are are important in progressing. Product pictures are examples and can vary from the original. Subject to errors.
Date 02.08.2024 Orders are placed under our general terms and conditions under https://www.brumberg.com/en/terms-and-conditions/general-terms-and-conditions-of-sale/