BRUMBERG

BB03 LED recessed spot set, trailing-edge phase dimmable, incl. connection box

Article no. 39463073

Light.
For Generations.



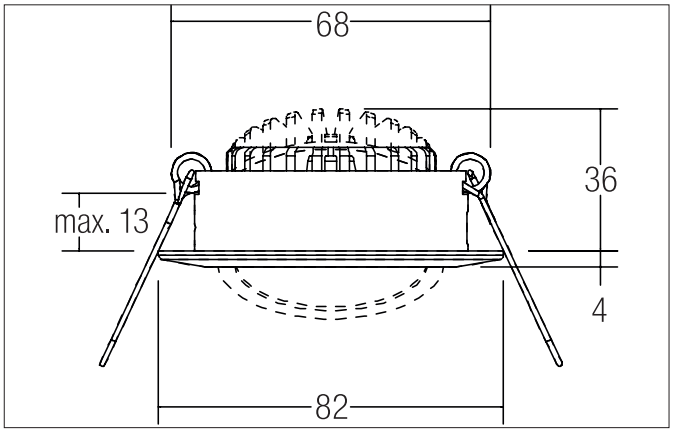

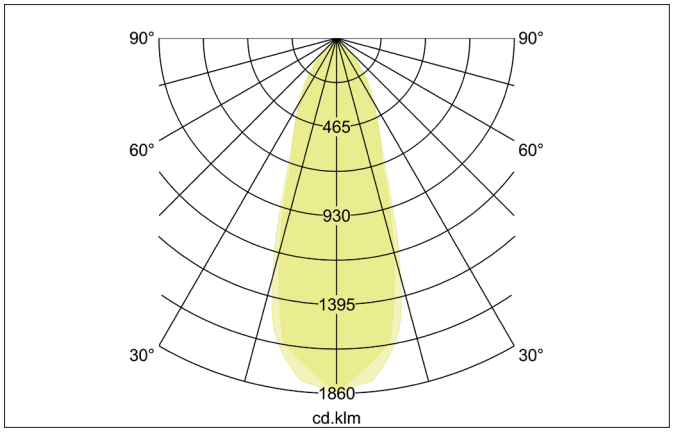

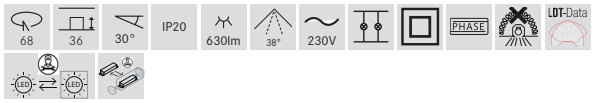

Tender
LED recessed spot set, trailing-edge phase dimmable, incl. connection box, Round.Toolless ceiling installation by installation springs. Ceiling cut-out Ø 68 mm, Installation depth 36 mm, Outer diameter 82 mm, Weight 0,194 kg, Reflector silver with rotattionssymmetrical, deep, wide distributed light intensity. Cover polycarbonat clear. Luminous flux 630 lm, Power 1 x 6 W, Light colour warm white, Correlated color temprature (CCT) 3.000 K, Colour rendering index CRI > 80, Rated life time L70/B50 at 25 °C: 30.000 h, Rated life time L80/B20 at 25 °C: 50.000 h, Housing material: Aluminium / Plastic, Colour: White, Permissible ambient temperature (ta): -20 °C - +25 °C, Protection class (EN 61140): II, Degree of protection (DIN EN 60529): IP20. With electronic driver, Trailing-edge phase dimmable.

Article data	
Article no.	39463073
GTIN	4251433936039
Series name	BB03
Short description	LED recessed spot set, trailing-edge phase dimmable, incl. connection box
Material	Aluminium / Plastic
Colour	White
Type of surface	Glossy
Shape	Round
Outer diameter	82 mm
Built-in diameter	68 mm
Installation depth	36 mm
Hight	4 mm
Scope of delivery	incl. connection box, 3-pole
Weight	0.194 kg
Conformance	CE, UKCA

All technical data as well as, weight and measurements are based on rated values and had been carefully prepared. We reserve the right to make technical changes which are are important in progressing. Product pictures are examples and can vary from the original. Subject to errors.
Date 06.08.2024 Orders are placed under our general terms and conditions under https://www.brumberg.com/en/terms-and-conditions/general-terms-and-conditions-of-sale/

BRUMBERG

BB03 LED recessed spot set, trailing-edge phase dimmable, incl. connection box

Article no. 39463073

Light.
For Generations.

Lighting technology	
Colour temperature	3.000 K
Light colour	White
Light output	Direct
Luminous flux	630 lm
System efficiency	105 lm/W
Colour rendering	CRI > 80
Reflector	High-gloss
Reflector colour	silver
Beam angle	38°
Light sharing	Symmetric
Adjustable color temperature	No

Operating technology of the luminaire	
System output	6 W
Voltage type	AC
AC nominal voltage max	230 V
Frequency max	50 Hz
Lamp	LED
Protection class	II
Degree of protection	IP20
Dimmable	Yes
Control	Trailing-edge phase
Bulb change possible	The light source of this luminaire may only be replaced by the manufacturer or a service technician commissioned by him or a similarly qualified person.
Rated life time L70/B50 at 25 °C	30,000 h
Rated life time L80/B20 at 25 °C	50.000 h

Mounting technology	
Mounting method	Recessed mounting
Place of installation	Ceiling-mounted
Adjustability	Pivoted
Swivel angle	30°
Max. ceiling thickness	13 mm
Further references	No cover with thermal insulation material
Material cover	Polycarbonat clear
Suitable for through-wiring	Yes

Packing data	
Gross weight	0.256 kg
Length of packaging	100 mm
Packaging width	100 mm
Packaging hight	100 mm
Disposal at end of life	This product must not be disposed of with household waste. You are obliged, to dispose of such electrical waste separately. By disposing of electrical waste and other old or defective electronics separately, you support recycling or other forms of re-use. In that way you help to take care and to avoid that harmful substances get into the environment.

All technical data as well as, weight and measurements are based on rated values and had been carefully prepared. We reserve the right to make technical changes which are are important in progressing. Product pictures are examples and can vary from the original. Subject to errors.
Date 06.08.2024 Orders are placed under our general terms and conditions under https://www.brumberg.com/en/terms-and-conditions/general-terms-and-conditions-of-sale/