BRUMBERG

# LED recessed spot set, on/off switchable

Article no. 38287173

Light.
For Generations.

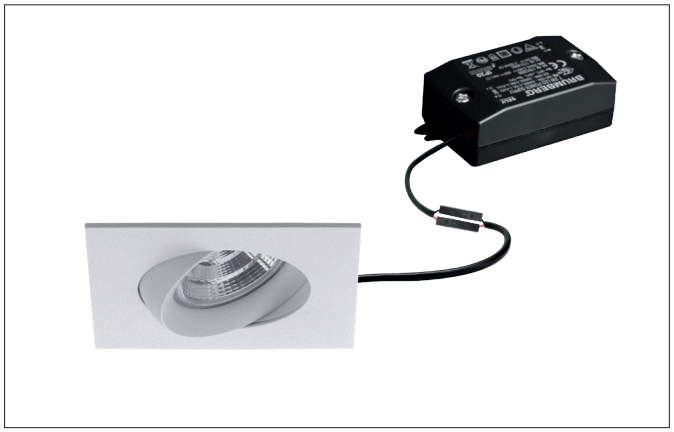

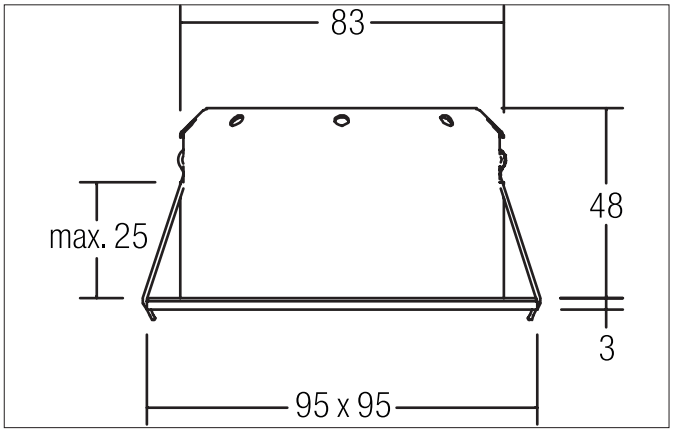


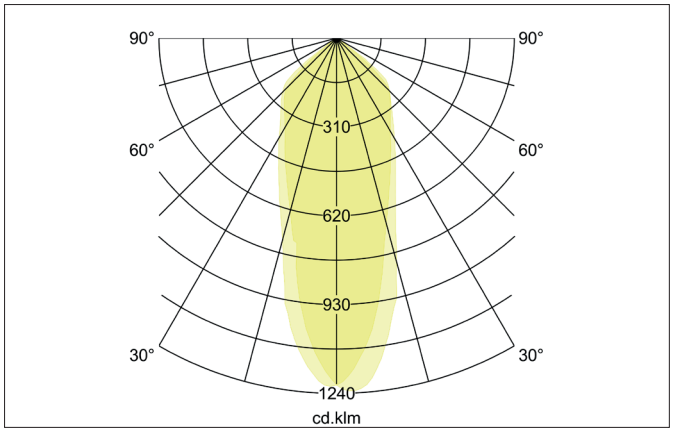





| Tender |
|---|
| LED recessed spot set, on/off switchable, Angular.Toolless ceiling installation by installation springs. Ceiling cut-out Ø 83 mm, Installation depth 48 mm, Weight 0,290 kg, Reflector silver with rotattionssymmetrical, deep, wide distributed light intensity. Cover plastic, transparent. Luminous flux 500 lm, Power 1 x 6 W, Light colour warm white, Correlated color temprature (CCT) 3.000 K, Colour rendering index CRI > 85, Housing material: Aluminium / Steel / Silicone rubber / PMMA, Colour: White, Permissible ambient temperature (ta): -20 °C - +25 °C, Protection class (EN 61140): II, Degree of protection (DIN EN 60529): IP44. For connection to an external driver, which is not included in the scope of delivery of the luminaire. on/off switchable. |

| Article data | |
|---|---|
| Article no. | 38287173 |
| GTIN | 4251433919674 |
| Short description | LED recessed spot set, on/off switchable |
| Material | Aluminium / Steel / Silicone rubber / PMMA |
| Colour | White |
| Shape | Angular |
| Built-in diameter | 83 mm |
| Installation depth | 48 mm |
| Hight | 3 mm |
| Weight | 0.290 kg |
| Conformance | CE, UKCA |

All technical data as well as, weight and measurements are based on rated values and had been carefully prepared. We reserve the right to make technical changes which are are important in progressing. Product pictures are examples and can vary from the original. Subject to errors.
Date 31.07.2024 Orders are placed under our general terms and conditions under https://www.brumberg.com/en/terms-and-conditions/general-terms-and-conditions-of-sale/

BRUMBERG

## LED recessed spot set, on/off switchable

Article no. 38287173

Light.
For Generations.

| Lighting technology | |
|---|---|
| Colour temperature | 3.000 K |
| Light colour | White |
| Light output | Direct |
| Luminous flux | 500 lm |
| System efficiency | 83 lm/W |
| Colour rendering | CRI > 85 |
| Reflector | High-gloss |
| Reflector colour | silver |
| Light sharing | Symmetric |
| Adjustable color temperature | No |

| Operating technology of the luminaire | |
|---|---|
| Article No. of used light source | 12287173 |
| Hight | 3 mm |
| Lamp holder | Plug&Play |
| Power | 6 W |
| Voltage type | DC |
| Current | 350 mA |
| Lamp | LED |
| Protection class | III |
| Degree of protection | IP44 |
| Protection class on the ceiling side | IP20 |
| Bulb change possible | The light source of this luminaire may only be replaced by the manufacturer or a service technician commissioned by him or a similarly qualified person. |

| Operating technology of driver | |
|---|---|
| Article No. of used driver | 17662 |
| Length | 68 mm |
| Width | 35 mm |
| Hight | 21 mm |
| AC nominal voltage min | 90 V |
| AC nominal voltage max | 264 V |
| Frequency max | 60 Hz |
| Dimmable | No |
| Control | on/off |
| Starting current | 10 A (max.10ms) |
| Power min | 1 W |
| Power | 7.2 W |
| Output current | 350 mA |
| Degree of protection | IP20 |
| Protection class | II |
| Flicker-free | Yes |

| Mounting technology | |
|---|---|
| Mounting method | Recessed mounting |
| Place of installation | Ceiling-mounted |
| Adjustability | Pivoted |
| Swivel angle | 30° |
| Rotation angle | 30° |
| Max. ceiling thickness | 25 mm |
| Material cover | Plastic, transparent |

All technical data as well as, weight and measurements are based on rated values and had been carefully prepared. We reserve the right to make technical changes which are are important in progressing. Product pictures are examples and can vary from the original. Subject to errors.
Date 31.07.2024 Orders are placed under our general terms and conditions under https://www.brumberg.com/en/terms-and-conditions/general-terms-and-conditions-of-sale/

BRUMBERG

**LED recessed spot set, on/off switchable**
Article no. 38287173

Light.
For Generations.

| Packing data | |
|---|---|
| Gross weight | 0.34 kg |
| Length of packaging | 140 mm |
| Packaging width | 110 mm |
| Packaging hight | 120 mm |
| Disposal at end of life | This product must not be disposed of with household waste. You are obliged, to dispose of such electrical waste separately.<br>By disposing of electrical waste and other old or defective electronics separately, you support recycling or other forms of re-use. In that way you help to take care and to avoid that harmful substances get into the environment. |

All technical data as well as, weight and measurements are based on rated values and had been carefully prepared. We reserve the right to make technical changes which are are important in progressing. Product pictures are examples and can vary from the original. Subject to errors.
Date 31.07.2024 Orders are placed under our general terms and conditions under https://www.brumberg.com/en/terms-and-conditions/general-terms-and-conditions-of-sale/