BRUMBERG

BB18 LED recessed spot set BB18, dim2warm, phase dimmable, incl. connection box

Article no. 39483023

Light.
For Generations.



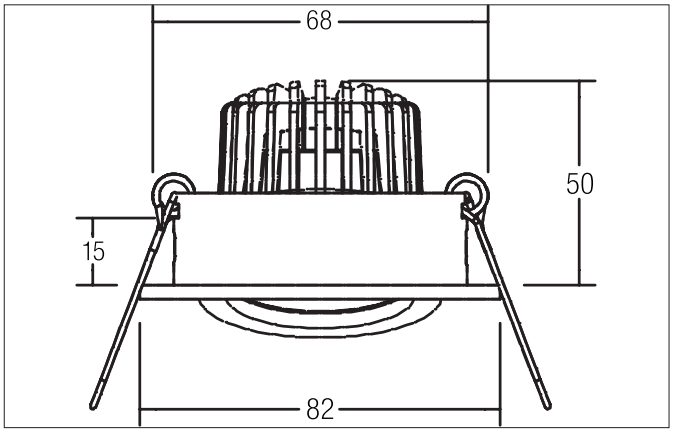

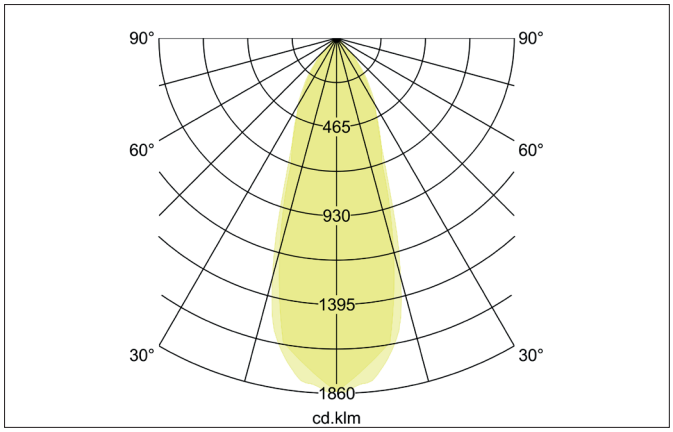

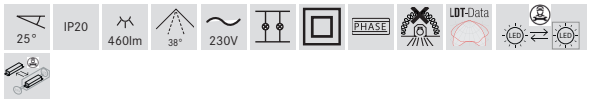

Tender
LED recessed spot set BB18, dim2warm, phase dimmable, incl. connection box, Round.Toolless ceiling installation by installation springs. Ceiling cut-out Ø 68 mm, Installation depth 50 mm, Outer diameter 82 mm, Weight 0,244 kg, Reflector silver with rotattionssymmetrical, deep, wide distributed light intensity. Cover glass transparent. Luminous flux 460 lm, Power 1 x 6 W, Light colour warm white to warm white, Correlated color temprature (CCT) 3.000 K - 1.800 K, Colour rendering index CRI > 90, Housing material: Aluminium / Glass / Plastic, Colour: Chrome, Permissible ambient temperature (ta): -20 °C - +25 °C, Protection class (EN 61140): II, Degree of protection (DIN EN 60529): IP20. With electronic driver, Trailing-edge phase dimmable.

Article data	
Article no.	39483023
GTIN	4251433936831
Series name	BB18
Short description	LED recessed spot set BB18, dim2warm, phase dimmable, incl. connection box
Material	Aluminium / Glass / Plastic
Colour	Chrome
Type of surface	Glossy
Shape	Round
Outer diameter	82 mm
Built-in diameter	68 mm
Installation depth	50 mm
Hight	3 mm
Scope of delivery	Incl. 3-pole connection box
Weight	0.244 kg
Conformance	CE, UKCA

All technical data as well as, weight and measurements are based on rated values and had been carefully prepared. We reserve the right to make technical changes which are are important in progressing. Product pictures are examples and can vary from the original. Subject to errors.
Date 16.09.2024 Orders are placed under our general terms and conditions under https://www.brumberg.com/en/terms-and-conditions/general-terms-and-conditions-of-sale/

BRUMBERG

BB18 LED recessed spot set BB18, dim2warm, phase dimmable, incl. connection box
Article no. 39483023

Light.
For Generations.

Lighting technology	
Colour temperature	3.000 K - 1.800 K
Light colour	White
Light output	Direct
Luminous flux	460 lm
System efficiency	77 lm/W
Colour rendering	CRI > 90
Reflector	High-gloss
Reflector colour	silver
Beam angle	38°
Light sharing	Symmetric
Adjustable color temperature	Infinite control

Operating technology of the luminaire	
Article No. of used light source	12963383
Hight	32 mm
Diameter	50 mm
Lamp holder	Plug&Play
Power	6 W
Voltage type	DC
Current	350 mA
Lamp	LED
Protection class	III
Degree of protection	IP20
Bulb change possible	The light source of this luminaire may only be replaced by the manufacturer or a service technician commissioned by him or a similarly qualified person.

Operating technology of driver	
Article No. of used driver	17663000
Length	110 mm
Width	50 mm
Hight	19 mm
AC nominal voltage min	198 V
AC nominal voltage max	264 V
Frequency max	60 Hz
Dimmable	Yes
Control	Trailing-edge phase
Starting current	1A (15,2 µs)
Power min	2.8 W
Power	7 W
Output current	350 mA
Degree of protection	IP20
Protection class	II
Flicker-free	Yes

Mounting technology	
Mounting method	Recessed mounting
Place of installation	Ceiling-mounted
Adjustability	Pivoted
Swivel angle	25°
Max. ceiling thickness	15 mm
Further references	No cover with thermal insulation material
Material cover	Glass transparent
Suitable for through-wiring	Yes

All technical data as well as, weight and measurements are based on rated values and had been carefully prepared. We reserve the right to make technical changes which are are important in progressing. Product pictures are examples and can vary from the original. Subject to errors.
Date 16.09.2024 Orders are placed under our general terms and conditions under https://www.brumberg.com/en/terms-and-conditions/general-terms-and-conditions-of-sale/

BRUMBERG

BB18 LED recessed spot set BB18, dim2warm, phase dimmable, incl. connection box
Article no. 39483023

Light.
For Generations.

Packing data	
Gross weight	0.305 kg
Length of packaging	100 mm
Packaging width	100 mm
Packaging hight	100 mm
Disposal at end of life	This product must not be disposed of with household waste. You are obliged, to dispose of such electrical waste separately. By disposing of electrical waste and other old or defective electronics separately, you support recycling or other forms of re-use. In that way you help to take care and to avoid that harmful substances get into the environment.

All technical data as well as, weight and measurements are based on rated values and had been carefully prepared. We reserve the right to make technical changes which are are important in progressing. Product pictures are examples and can vary from the original. Subject to errors.
Date 16.09.2024 Orders are placed under our general terms and conditions under https://www.brumberg.com/en/terms-and-conditions/general-terms-and-conditions-of-sale/