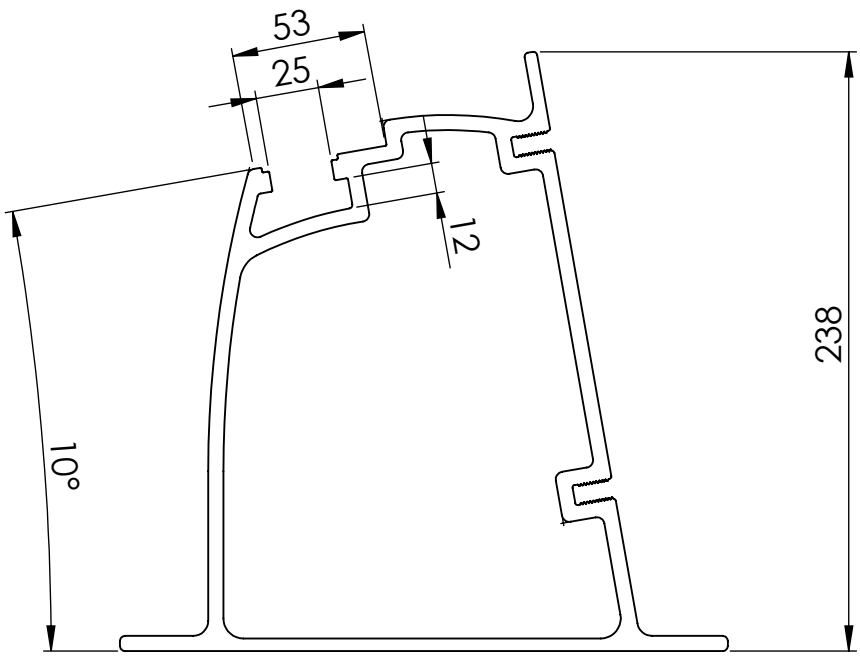

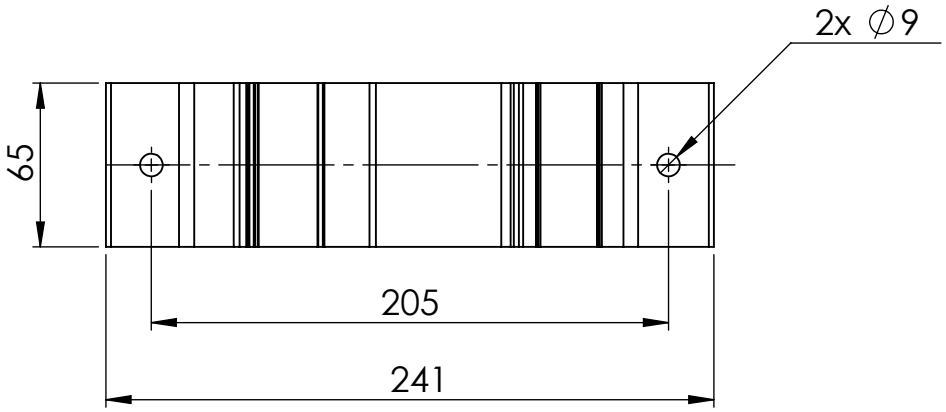

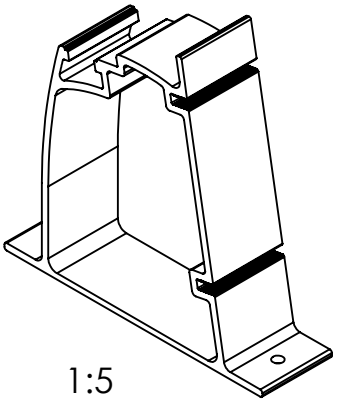

1:5

K2 Systems GmbH
Industriestr. 18
71272 Renningen
07159/42059-0

Designation:

Data sheet Dome S1000 2.0

	Name	Date	Material:		Item no.:		
Designed	M.Preiß	05.11.2015	EN AW 6063 T66		2001967		A4
Approved	M.Wiggers	09.11.2015	Surface: mill-finish		Drawing no.: 07-91-001		All dimensions in mm
Last change	xxx	xxx	Weight: ca. 0,91kg	Scale:1:3 (1:5)	Tolerance ISO 8015	General tolerances DIN ISO 2768mK	Sheet 1 of 1

This drawing is the sole property of K2 Systems GmbH. It is protected by copyright and may only be copied, reproduced or distributed to a third party with explicit permission!