BRUMBERG

DRAWER Recessed spot, GX5,3
Article no. 1925.07

Light.
For Generations.



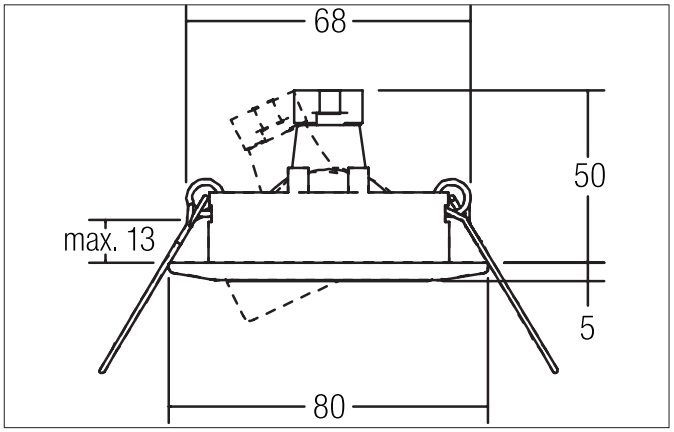

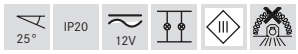

Tender
Recessed spot, GX5,3, glossy white, Round.In a compact design, for installation in tool-less rapid assembly systems.Lamp holder: GX5.3, Mounting method: Recessed mounting, Place of installation: Ceiling-mounted, Material: Steel, Degree of protection: according to DIN EN 60529 IP20, Protection class: (EN 61140) III, Voltage: 12V, Power: 50 W, Amount of light sources / fittings: 1 Qty, Adjustability: Pivoted, without control gear, Dimmable: Depending on type of control gear, Control: Depending on driver.

Product Benefits

- Recessed spotlight in round design made of steel for LED retrofit lamps with GX5.3 base.
- Ceiling cut-out 68 mm, diameter 80 mm, installation depth 50 mm, IP20.
- Pivoting range 25°.
- Version: without snap ring.
- Classic, formally restrained design.
- The cover can be removed for renovation.
- Also available as GU10 version in the same look.

All technical data as well as, weight and measurements are based on rated values and had been carefully prepared. We reserve the right to make technical changes which are are important in progressing. Product pictures are examples and can vary from the original. Subject to errors.
Date 16.07.2024 Orders are placed under our general terms and conditions under https://www.brumberg.com/en/terms-and-conditions/general-terms-and-conditions-of-sale/

BRUMBERG

DRAWER Recessed spot, GX5,3

Article no. 1925.07

Light.
For Generations.

Article data	
Article no.	1925.07
GTIN	4250047708001
Series name	DRAWER
Short description	Recessed spot, GX5,3
Material	Steel
Colour	White
Type of surface	Glossy
Shape	Round
Outer diameter	80 mm
Built-in diameter	68 mm
Installation depth	50 mm
Hight	5 mm
Weight	0.073 kg
Conformance	CE, UKCA

Operating technology of the luminaire	
System output	50 W
Voltage type	AC/DC
AC nominal voltage max	12 V
Frequency max	50 Hz
Lamp	For LED-retrofill lamp
Lamp holder	GX5.3
Protection class	III
Degree of protection	IP20
Dimmable	Depending on type of control gear
Control	Depending on driver

Mounting technology	
Mounting method	Recessed mounting
Place of installation	Ceiling-mounted
Adjustability	Pivoted
Swivel angle	25°
Max. ceiling thickness	13 mm
Further references	No cover with thermal insulation material
Material cover	Without cover
Circlip	Without circlip

Packing data	
Gross weight	0.096 kg
Length of packaging	85 mm
Packaging width	43 mm
Packaging hight	84 mm
Disposal at end of life	This product must not be disposed of with household waste. You are obliged, to dispose of such electrical waste separately. By disposing of electrical waste and other old or defective electronics separately, you support recycling or other forms of re-use. In that way you help to take care and to avoid that harmful substances get into the environment.

Compatible LED-modules						

All technical data as well as, weight and measurements are based on rated values and had been carefully prepared. We reserve the right to make technical changes which are are important in progressing. Product pictures are examples and can vary from the original. Subject to errors.
Date 16.07.2024 Orders are placed under our general terms and conditions under https://www.brumberg.com/en/terms-and-conditions/general-terms-and-conditions-of-sale/