BRUMBERG

DISC LED recessed spot, with lens optics, trailing-edge phase dimmable

Article no. 39421253

Light.
For Generations.



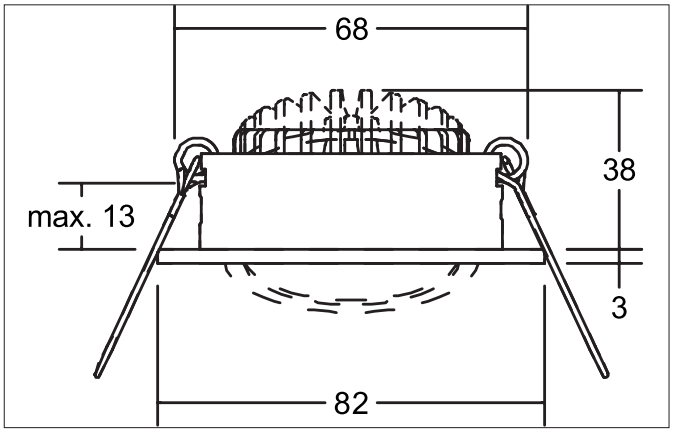

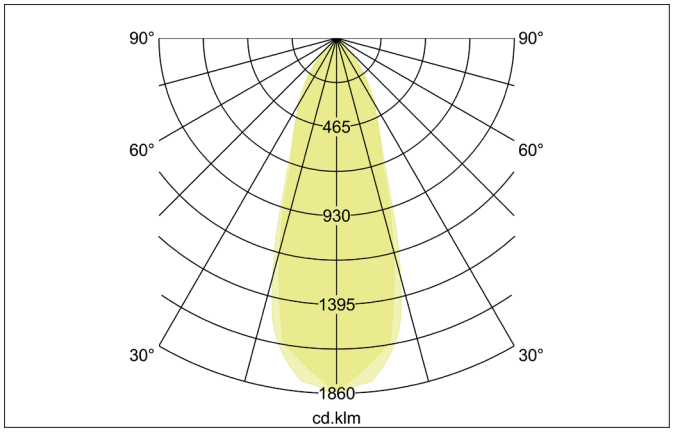

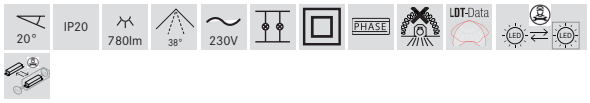

Tender

LED recessed spot, with lens optics, trailing-edge phase dimmable, Round.Toolless ceiling installation by installation springs. Ceiling cut-out Ø 68 mm, Installation depth 38 mm, Outer diameter 82 mm, Weight 0,180 kg, Reflector silver with rotattionssymmetrical, deep, wide distributed light intensity. Cover plastic, transparent. Luminous flux 780 lm, Power 1 x 6 W, Light colour warm white, Correlated color tempra-ture (CCT) 3.000 K, Colour rendering index CRI > 80, Housing material: Aluminium / Glass, Colour: Alu, Permissible ambient temperature (ta): -20 °C - +25 °C, Protection class (EN 61140): II, Degree of protection (DIN EN 60529): IP20. With electronic driver, Trailing-edge pha-se dimmable.

Product Benefits

- LED recessed spotlight in round design made of solid aluminum with 6 W LED module with lens optics and dimmable converter (phase cut-off).
- Ceiling cut-out 68 mm, diameter 82 mm, installation depth 38 mm, IP20.
- Pivoting range 30°.
- Without visible snap ring.
- Classic, formally restrained design.
- Also available in the same look as a pure luminaire for 350 mA (without converter) and as a switchable set.

All technical data as well as, weight and measurements are based on rated values and had been carefully prepared. We reserve the right to make technical changes which are are important in progressing. Product pictures are examples and can vary from the original. Subject to errors.
Date 15.09.2024 Orders are placed under our general terms and conditions under https://www.brumberg.com/en/terms-and-conditions/general-terms-and-conditions-of-sale/

BRUMBERG

DISC LED recessed spot, with lens optics, trailing-edge phase dimmable

Article no. 39421253

Light.
For Generations.

Article data	
Article no.	39421253
GTIN	4251433950349
Series name	DISC
Short description	LED recessed spot, with lens optics, trailing-edge phase dimmable
Material	Aluminium / Glass
Colour	Alu
Type of surface	Matt
Shape	Round
Outer diameter	82 mm
Built-in diameter	68 mm
Installation depth	38 mm
Hight	3 mm
Weight	0.180 kg
Conformance	CE, UKCA

Lighting technology	
Colour temperature	3.000 K
Light colour	White
Light output	Direct
Luminous flux	780 lm
System efficiency	130 lm/W
Colour rendering	CRI > 80
Reflector	High-gloss
Reflector colour	silver
Beam angle	38°
Light sharing	Symmetric
Adjustable color temperature	No

Operating technology of the luminaire	
Hight	3 mm
Lamp holder	Plug&Play
Power	6 W
Voltage type	DC
Current	350 mA
Lamp	LED
Protection class	III
Degree of protection	IP20
Bulb change possible	Yes

Mounting technology	
Mounting method	Recessed mounting
Place of installation	Ceiling-mounted
Adjustability	Pivoted
Swivel angle	20°
Max. ceiling thickness	13 mm
Further references	No cover with thermal insulation material
Material cover	Plastic, transparent
Circlip	Without circlip
Suitable for through-wiring	Yes, with optional accessories

All technical data as well as, weight and measurements are based on rated values and had been carefully prepared. We reserve the right to make technical changes which are are important in progressing. Product pictures are examples and can vary from the original. Subject to errors.
Date 15.09.2024 Orders are placed under our general terms and conditions under https://www.brumberg.com/en/terms-and-conditions/general-terms-and-conditions-of-sale/

BRUMBERG

DISC LED recessed spot, with lens optics, trailing-edge phase dimmable

Article no. 39421253

Light.
For Generations.

Packing data	
Gross weight	0.236 kg
Length of packaging	95 mm
Packaging width	75 mm
Packaging hight	95 mm
Disposal at end of life	This product must not be disposed of with household waste. You are obliged, to dispose of such electrical waste separately. By disposing of electrical waste and other old or defective electronics separately, you support recycling or other forms of re-use. In that way you help to take care and to avoid that harmful substances get into the environment.

All technical data as well as, weight and measurements are based on rated values and had been carefully prepared. We reserve the right to make technical changes which are are important in progressing. Product pictures are examples and can vary from the original. Subject to errors.
Date 15.09.2024 Orders are placed under our general terms and conditions under https://www.brumberg.com/en/terms-and-conditions/general-terms-and-conditions-of-sale/