BRUMBERG

KALINDA-S Recessed spot, GX5,3

Article no. 20355150

Light.
For Generations.



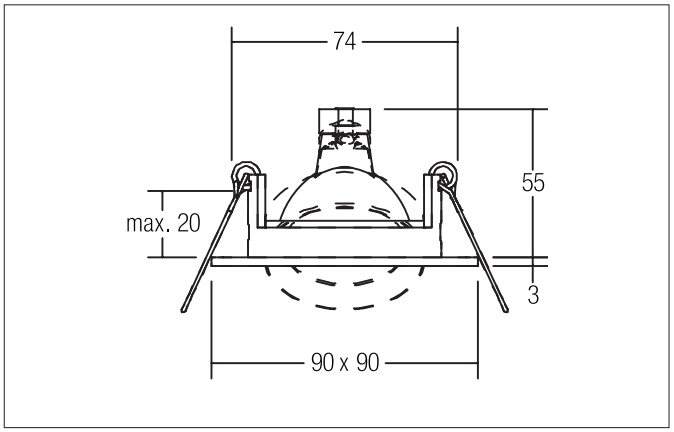

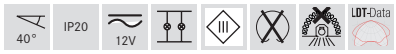

Tender
Recessed spot, GX5,3, nickel satin, Square.In a compact design, for installation in tool-less rapid assembly systems. Mounting method: Recessed mounting, Place of installation: Ceiling-mounted, Material: Aluminium, Degree of protection: according to DIN EN 60529 IP20, Protection class: (EN 61140) III, Voltage: 12V, Power: 50 W, Amount of light sources / fittings: 1 Qty, Adjustability: Pivoted, without control gear, Dimmable: Depending on type of control gear, Control: Depending on driver.

Product Benefits

- Recessed spotlight in square design made of solid aluminum
  for LED retrofit lamps with GX5.3 base.
- Ceiling cut-out 74 mm, length 90 mm, width 90 mm, installation depth 55 mm, IP20.
- Swivel range 40°.
- Without visible snap ring.
- Classic, formally restrained design.
- Also available in the same look as GU10 version, as a switchable and dimmable set
  set (trailing edge).

All technical data as well as, weight and measurements are based on rated values and had been carefully prepared. We reserve the right to make technical changes which are are important in progressing. Product pictures are examples and can vary from the original. Subject to errors.
Date 23.07.2024 Orders are placed under our general terms and conditions under https://www.brumberg.com/en/terms-and-conditions/general-terms-and-conditions-of-sale/

BRUMBERG

KALINDA-S Recessed spot, GX5,3

Article no. 20355150

Light.
For Generations.

Article data	
Article no.	20355150
GTIN	4251433918233
Series name	KALINDA-S
Short description	Recessed spot, GX5,3
Material	Aluminium
Colour	Nickel
Type of surface	Matt
Shape	Square
Built-in diameter	74 mm
Installation depth	55 mm
Hight	3 mm
Weight	0.156 kg
Conformance	CE, UKCA

Lighting technology	
Light output	Direct
Light sharing	Symmetric
Adjustable color temperature	No

Operating technology of the luminaire	
System output	50 W
Voltage type	AC/DC
AC nominal voltage max	12 V
Frequency max	50 Hz
Lamp	For LED-retrofill lamp
Protection class	III
Degree of protection	IP20
Dimmable	Depending on type of control gear
Control	Depending on driver
Bulb change possible	Yes

Mounting technology	
Mounting method	Recessed mounting
Place of installation	Ceiling-mounted
Adjustability	Pivoted
Swivel angle	40°
Max. ceiling thickness	20 mm
Further references	No cover with thermal insulation material
Material cover	Without cover
Circlip	Without circlip

Packing data	
Gross weight	0.187 kg
Length of packaging	145 mm
Packaging width	100 mm
Packaging hight	60 mm
Disposal at end of life	This product must not be disposed of with household waste. You are obliged, to dispose of such electrical waste separately. By disposing of electrical waste and other old or defective electronics separately, you support recycling or other forms of re-use. In that way you help to take care and to avoid that harmful substances get into the environment.

All technical data as well as, weight and measurements are based on rated values and had been carefully prepared. We reserve the right to make technical changes which are are important in progressing. Product pictures are examples and can vary from the original. Subject to errors.
Date 23.07.2024 Orders are placed under our general terms and conditions under https://www.brumberg.com/en/terms-and-conditions/general-terms-and-conditions-of-sale/