IS 3360 ECO

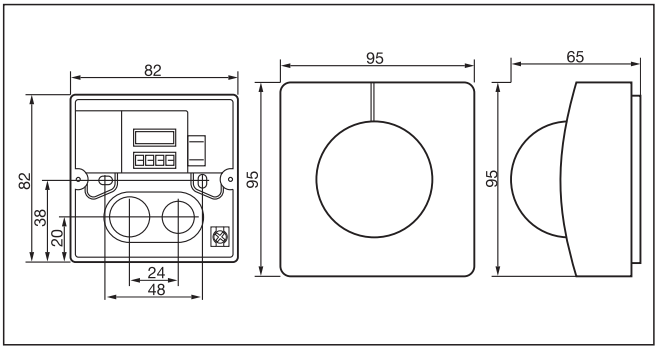
82
95
65
82
38
20
24
48
95
95

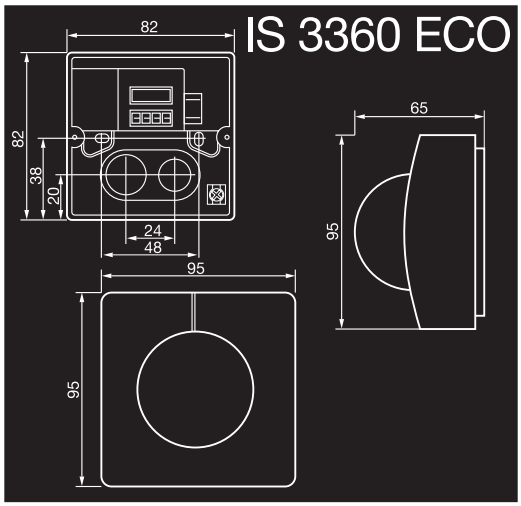
IS 3360 ECO
82
82
38
20
24
48
65
95
95
95

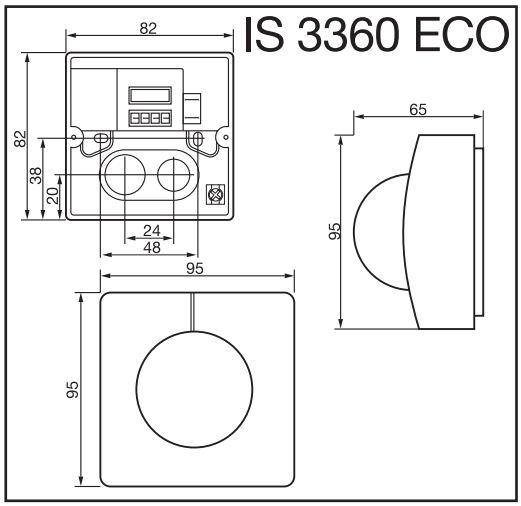
IS 3360 ECO
82
82
38
20
24
48
65
95
95
95