BRUMBERG

DISC LED recessed spot, wich lens optics

Article no. 12321023

Light.
For Generations.



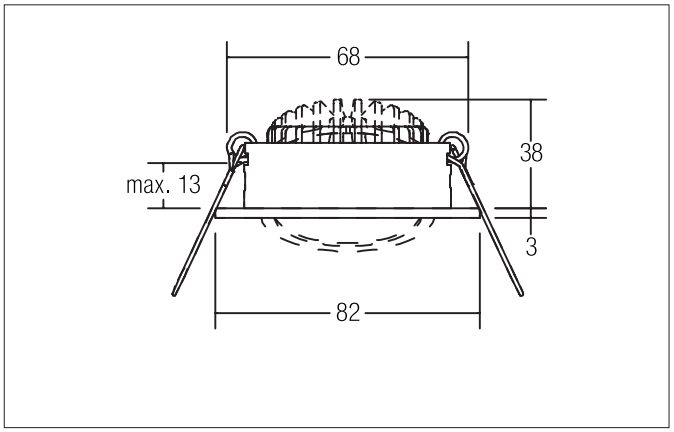

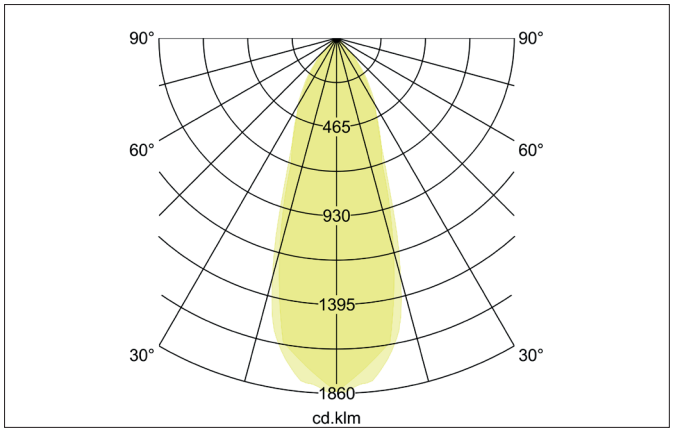

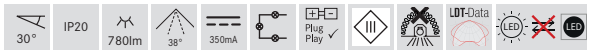

Tender

LED recessed spot, wich lens optics, Round.Toolless ceiling installation by installation springs. Ceiling cut-out Ø 68 mm, Installation depth 38 mm, Outer diameter 82 mm, Weight 0,109 kg, Reflector silver with rotattionssymmetrical, deep, wide distributed light intensity. Cover plastic, transparent. Luminous flux 780 lm, Power 1 x 6 W, Light colour warm white, Correlated color temprature (CCT) 3.000 K, Colour rendering index CRI > 80, Housing material: Aluminium / Plastic, Colour: Chrome, Permissible ambient temperature (ta): -20 °C - +25 °C, Protection class (EN 61140): III, Degree of protection (DIN EN 60529): IP20. For connection to an external driver, which is not included in the scope of delivery of the luminaire. Depending on driver dimmable.

Product Benefits

- LED recessed spotlight in round design made of solid aluminum.
- Ceiling cut-out 68 mm, outer diameter 82 mm,
  installation depth 38 mm, IP20.
- Pivoting range 30°.
- Without visible snap ring.
- Classic, formally restrained design.
- Dimmable when using a suitable converter.
- Also available in the same look as a switchable and dimmable set
  (trailing edge) in the same look.

All technical data as well as, weight and measurements are based on rated values and had been carefully prepared. We reserve the right to make technical changes which are are important in progressing. Product pictures are examples and can vary from the original. Subject to errors.
Date 12.09.2024 Orders are placed under our general terms and conditions under https://www.brumberg.com/en/terms-and-conditions/general-terms-and-conditions-of-sale/

BRUMBERG

DISC LED recessed spot, wich lens optics

Article no. 12321023

Light.
For Generations.

Article data	
Article no.	12321023
GTIN	4251433921615
Series name	DISC
Short description	LED recessed spot, wich lens optics
Material	Aluminium / Plastic
Colour	Chrome
Type of surface	Glossy
Shape	Round
Outer diameter	82 mm
Built-in diameter	68 mm
Installation depth	38 mm
Hight	3 mm
Weight	0.109 kg
Conformance	CE, UKCA

Lighting technology	
Colour temperature	3.000 K
Light colour	White
Light output	Direct
Luminous flux	780 lm
System efficiency	130 lm/W
Colour rendering	CRI > 80
Reflector	High-gloss
Reflector colour	silver
Beam angle	38°
Light sharing	Symmetric
Adjustable color temperature	No

Operating technology of the luminaire	
System output	6 W
Voltage type	DC
Current	350 mA
Lamp	LED
Lamp holder	Plug&Play
Protection class	III
Degree of protection	IP20
Dimmable	Depending on type of control gear
Control	Depending on driver
Bulb change possible	Yes

Mounting technology	
Mounting method	Recessed mounting
Place of installation	Ceiling-mounted
Adjustability	Pivoted
Swivel angle	30°
Max. ceiling thickness	13 mm
Further references	No cover with thermal insulation material
Material cover	Plastic, transparent
Circlip	Without circlip

All technical data as well as, weight and measurements are based on rated values and had been carefully prepared. We reserve the right to make technical changes which are are important in progressing. Product pictures are examples and can vary from the original. Subject to errors.
Date 12.09.2024 Orders are placed under our general terms and conditions under https://www.brumberg.com/en/terms-and-conditions/general-terms-and-conditions-of-sale/

BRUMBERG

DISC LED recessed spot, wich lens optics
Article no. 12321023

Light.
For Generations.

Packing data	
Gross weight	0.142 kg
Length of packaging	85 mm
Packaging width	43 mm
Packaging hight	85 mm
Disposal at end of life	This product must not be disposed of with household waste. You are obliged, to dispose of such electrical waste separately. By disposing of electrical waste and other old or defective electronics separately, you support recycling or other forms of re-use. In that way you help to take care and to avoid that harmful substances get into the environment.

All technical data as well as, weight and measurements are based on rated values and had been carefully prepared. We reserve the right to make technical changes which are are important in progressing. Product pictures are examples and can vary from the original. Subject to errors.
Date 12.09.2024 Orders are placed under our general terms and conditions under https://www.brumberg.com/en/terms-and-conditions/general-terms-and-conditions-of-sale/

BRUMBERG

DISC LED recessed spot, wich lens optics
Article no. 12321023

Light.
For Generations.

Accessories
Article no.: 17662000 LED converter 350 mA, on/off switchable Power: 1 - 7,2 W Dimensions: 68 mm x 35 mm x 21 mm https://www.brumberg.com/fileadmin/products/Datenblatt_17662000_2021_DE.pdf
Article no.: 17662010 LED converter 350 mA, on/off switchable Power: 1 - 7,2 W Dimensions: 68 mm x 35 mm x 21 mm https://www.brumberg.com/fileadmin/products/Datenblatt_17662010_2021_DE.pdf
Article no.: 17662020 LED converter 350 mA, on/off switchable Power: 1 - 7,2 W Dimensions: 68 mm x 35 mm x 21 mm https://www.brumberg.com/fileadmin/products/Datenblatt_17662020_2021_DE.pdf
Article no.: 17613000 LED converter 350 mA, on/off switchable Power: 1 - 15 W Dimensions: 115 mm x 34 mm x 19 mm https://www.brumberg.com/fileadmin/products/Datenblatt_17613000_2021_DE.pdf
Article no.: 17613010 LED converter 350 mA, on/off switchable Power: 1 - 15 W Dimensions: 115 mm x 34 mm x 19 mm https://www.brumberg.com/fileadmin/products/Datenblatt_17613010_2021_DE.pdf
Article no.: 17613020 LED converter 350 mA, on/off switchable Power: 1 - 15 W Dimensions: 115 mm x 34 mm x 19 mm https://www.brumberg.com/fileadmin/products/Datenblatt_17613020_2021_DE.pdf
Article no.: 17621000 LED converter 350 mA, on/off switchable Power: 1 - 21 W Dimensions: 128 mm x 50 mm x 13 mm https://www.brumberg.com/fileadmin/products/Datenblatt_17621000_2021_DE.pdf
Article no.: 17621010 LED converter 350 mA, on/off switchable Power: 1 - 21 W Dimensions: 128 mm x 50 mm x 13 mm https://www.brumberg.com/fileadmin/products/Datenblatt_17621010_2021_DE.pdf
Article no.: 17621020 LED converter 350 mA, on/off switchable Power: 1 - 21 W Dimensions: 128 mm x 50 mm x 13 mm https://www.brumberg.com/fileadmin/products/Datenblatt_17621020_2021_DE.pdf
Article no.: 17663000 LED converter 350 mA, trailing-edge phase dimmable Power: 2,8 - 7 W Dimensions: 110 mm x 50 mm x 19 mm https://www.brumberg.com/fileadmin/products/Datenblatt_17663000_2021_DE.pdf

All technical data as well as, weight and measurements are based on rated values and had been carefully prepared. We reserve the right to make technical changes which are are important in progressing. Product pictures are examples and can vary from the original. Subject to errors.
Date 12.09.2024 Orders are placed under our general terms and conditions under https://www.brumberg.com/en/terms-and-conditions/general-terms-and-conditions-of-sale/

BRUMBERG

DISC LED recessed spot, wich lens optics
Article no. 12321023

Light.
For Generations.

Accessories
Article no.: 17663010 LED converter 350 mA, trailing-edge phase dimmable Power: 2,8 - 7 W Dimensions: 110 mm x 50 mm x 19 mm https://www.brumberg.com/fileadmin/products/Datenblatt_17663010_2021_DE.pdf
Article no.: 17663020 LED converter 350 mA, trailing-edge phase dimmable Power: 2,8 - 7 W Dimensions: 110 mm x 50 mm x 19 mm https://www.brumberg.com/fileadmin/products/Datenblatt_17663020_2021_DE.pdf
Article no.: 17652000 LED-round converter 350 mA, trailing-edge phase dimmer Power: 4,9 - 7 W Dimensions: 51 mm x 24 mm https://www.brumberg.com/fileadmin/products/Datenblatt_17652000_2021_DE.pdf
Article no.: 17652020 LED-round converter 350 mA, trailing-edge phase dimmer Power: 4,9 - 7 W Dimensions: 51 mm x 24 mm https://www.brumberg.com/fileadmin/products/Datenblatt_17652020_2021_DE.pdf
Article no.: 17640000 LED converter 350 mA, trailing-edge phase dimmable Power: 4,2 - 10 W Dimensions: 102 mm x 38 mm x 21 mm https://www.brumberg.com/fileadmin/products/Datenblatt_17640000_2021_DE.pdf
Article no.: 17640010 LED converter 350 mA, trailing-edge phase dimmable Power: 4,2 - 10 W Dimensions: 102 mm x 38 mm x 21 mm https://www.brumberg.com/fileadmin/products/Datenblatt_17640010_2021_DE.pdf
Article no.: 17640020 LED converter 350 mA, trailing-edge phase dimmable Power: 4,2 - 10 W Dimensions: 102 mm x 38 mm x 21 mm https://www.brumberg.com/fileadmin/products/Datenblatt_17640020_2021_DE.pdf
Article no.: 17648000 LED converter 350 mA, trailing-edge phase dimmable Power: 0,7 - 17 W Dimensions: 166 mm x 46 mm x 34 mm https://www.brumberg.com/fileadmin/products/Datenblatt_17648000_2021_DE.pdf
Article no.: 17648010 LED converter 350 mA, trailing-edge phase dimmable Power: 0,7 - 17 W Dimensions: 166 mm x 46 mm x 34 mm https://www.brumberg.com/fileadmin/products/Datenblatt_17648010_2021_DE.pdf
Article no.: 17648020 LED converter 350 mA, trailing-edge phase dimmable Power: 0,7 - 17 W Dimensions: 166 mm x 46 mm x 34 mm https://www.brumberg.com/fileadmin/products/Datenblatt_17648020_2021_DE.pdf
Article no.: 17657000 LED converter 350 mA, 1-10 V dimmable (analog) Power: 5,2 - 18 W Dimensions: 110 mm x 52 mm x 22 mm https://www.brumberg.com/fileadmin/products/Datenblatt_17657000_2021_DE.pdf

All technical data as well as, weight and measurements are based on rated values and had been carefully prepared. We reserve the right to make technical changes which are are important in progressing. Product pictures are examples and can vary from the original. Subject to errors.
Date 12.09.2024 Orders are placed under our general terms and conditions under https://www.brumberg.com/en/terms-and-conditions/general-terms-and-conditions-of-sale/

BRUMBERG

DISC LED recessed spot, wich lens optics
Article no. 12321023

Light.
For Generations.

Accessories
Article no.: 17657010 LED converter 350 mA, 1-10 V dimmable (analog) Power: 5,2 - 18 W Dimensions: 110 mm x 52 mm x 22 mm https://www.brumberg.com/fileadmin/products/Datenblatt_17657010_2021_DE.pdf
Article no.: 17684000 LED converter 350 mA, DALI dimmable (digital) Power: 2,8 - 7 W Dimensions: 130 mm x 42 mm x 22 mm https://www.brumberg.com/fileadmin/products/Datenblatt_17684000_2021_DE.pdf
Article no.: 17684010 LED converter 350 mA, DALI dimmable (digital) Power: 2,8 - 7 W Dimensions: 130 mm x 42 mm x 22 mm https://www.brumberg.com/fileadmin/products/Datenblatt_17684010_2021_DE.pdf
Article no.: 17684020 LED converter 350 mA, DALI dimmable (digital) Power: 2,8 - 7 W Dimensions: 130 mm x 42 mm x 22 mm https://www.brumberg.com/fileadmin/products/Datenblatt_17684020_2021_DE.pdf
Article no.: 17658000 LED round converter 350 mA, DALI dimmable (digital) Power: 2,1 - 9 W Dimensions: 56 mm x 25 mm https://www.brumberg.com/fileadmin/products/Datenblatt_17658000_2021_DE.pdf
Article no.: 17658010 LED round converter 350 mA, DALI dimmable (digital) Power: 2,1 - 9 W Dimensions: 56 mm x 25 mm https://www.brumberg.com/fileadmin/products/Datenblatt_17658010_2021_DE.pdf
Article no.: 17658020 LED round converter 350 mA, DALI dimmable (digital) Power: 2,1 - 9 W Dimensions: 56 mm x 25 mm https://www.brumberg.com/fileadmin/products/Datenblatt_17658020_2021_DE.pdf
Article no.: 17683000 LED converter 350 mA, DALI dimmable (digital) Power: 3,5 - 17 W Dimensions: 110 mm x 52 mm x 22 mm https://www.brumberg.com/fileadmin/products/Datenblatt_17683000_2021_DE.pdf
Article no.: 17683010 LED converter 350 mA, DALI dimmable (digital) Power: 3,5 - 17 W Dimensions: 110 mm x 52 mm x 22 mm https://www.brumberg.com/fileadmin/products/Datenblatt_17683010_2021_DE.pdf
Article no.: 17683020 LED converter 350 mA, DALI dimmable (digital) Power: 3,5 - 17 W Dimensions: 110 mm x 52 mm x 22 mm https://www.brumberg.com/fileadmin/products/Datenblatt_17683020_2021_DE.pdf
Article no.: 17671000 LED converter 350mA, ZigBee dimmable Power: 3,5 - 18,5 W Dimensions: 146 mm x 44 mm x 30 mm https://www.brumberg.com/fileadmin/products/Datenblatt_17671000_2021_DE.pdf

All technical data as well as, weight and measurements are based on rated values and had been carefully prepared. We reserve the right to make technical changes which are are important in progressing. Product pictures are examples and can vary from the original. Subject to errors.
Date 12.09.2024 Orders are placed under our general terms and conditions under https://www.brumberg.com/en/terms-and-conditions/general-terms-and-conditions-of-sale/

BRUMBERG

DISC LED recessed spot, wich lens optics
Article no. 12321023

Light.
For Generations.

Accessories
Article no.: 17671010 LED converter 350mA, ZigBee dimmable Power: 3,5 - 18,5 W Dimensions: 146 mm x 44 mm x 30 mm https://www.brumberg.com/fileadmin/products/Datenblatt_17671010_2021_DE.pdf
Article no.: 17671020 LED converter 350mA, ZigBee dimmable Power: 3,5 - 18,5 W Dimensions: 146 mm x 44 mm x 30 mm https://www.brumberg.com/fileadmin/products/Datenblatt_17671020_2021_DE.pdf
Article no.: 17672000 LED converter 350mA, Casambi dimmable Power: 3,5 - 18,5 W Dimensions: 146 mm x 44 mm x 30 mm https://www.brumberg.com/fileadmin/products/Datenblatt_17672000_2021_DE.pdf
Article no.: 17672010 LED converter 350mA, Casambi dimmable Power: 3,5 - 18,5 W Dimensions: 146 mm x 44 mm x 30 mm https://www.brumberg.com/fileadmin/products/Datenblatt_17672010_2021_DE.pdf
Article no.: 17672020 LED converter 350mA, Casambi dimmable Power: 3,5 - 18,5 W Dimensions: 146 mm x 44 mm x 30 mm https://www.brumberg.com/fileadmin/products/Datenblatt_17672020_2021_DE.pdf
Article no.: 17682000 LED converter 350 mA, DALI dimmable (digital) Power: 1,8 - 18,5 W Dimensions: 146 mm x 43.5 mm x 22 mm https://www.brumberg.com/fileadmin/products/Datenblatt_17682000_2021_DE.pdf
Article no.: 17682010 LED converter 350 mA, DALI dimmable (digital) Power: 1,8 - 18,5 W Dimensions: 146 mm x 43.5 mm x 22 mm https://www.brumberg.com/fileadmin/products/Datenblatt_17682010_2021_DE.pdf
Article no.: 17682020 LED converter 350 mA, DALI dimmable (digital) Power: 1,8 - 18,5 W Dimensions: 146 mm x 43.5 mm x 22 mm https://www.brumberg.com/fileadmin/products/Datenblatt_17682020_2021_DE.pdf
Article no.: 3835 Plug & Play extension lead 350 mA Dimensions: 500 mm https://www.brumberg.com/fileadmin/products/Datenblatt_00003835_2021_DE.pdf
Article no.: 3836 Plug & Play extension lead 350 mA Dimensions: 1,000 mm https://www.brumberg.com/fileadmin/products/Datenblatt_00003836_2021_DE.pdf
Article no.: 3837 Plug & Play extension lead 350 mA Dimensions: 2,000 mm https://www.brumberg.com/fileadmin/products/Datenblatt_00003837_2021_DE.pdf

All technical data as well as, weight and measurements are based on rated values and had been carefully prepared. We reserve the right to make technical changes which are are important in progressing. Product pictures are examples and can vary from the original. Subject to errors.
Date 12.09.2024 Orders are placed under our general terms and conditions under https://www.brumberg.com/en/terms-and-conditions/general-terms-and-conditions-of-sale/