Instruction:

663-0288-01
44-2012

RZB LEUCHTEN

INSTRUCTION

Gartenstrahler PAR 16

663-0288-01
44-2012

RZB LEUCHTEN

IP55 220-240V ~ 50/60Hz 0.5m 3 x 1,0mm²

721681.*

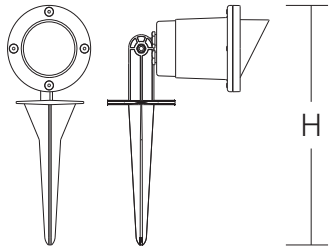

721680.*

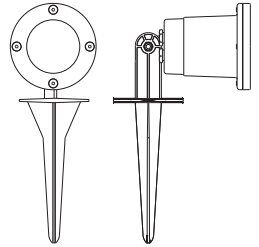

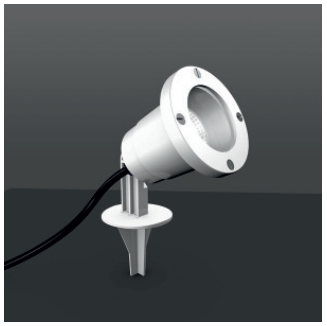



721682.*

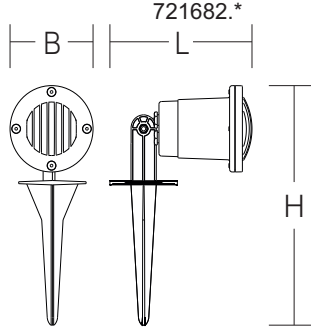



721680.092	L157xB98xH275	1xQPAR16	50W	850g
721680.0931	L157xB98xH275	1xQPAR16	50W	850g
721681.092	L191xB98xH275	1xQPAR16	50W	850g
721681.0931	L191xB98xH275	1xQPAR16	50W	850g
721682.092	L170xB98xH275	1xQPAR16	50W	850g
721682.0931	L170xB98xH275	1xQPAR16	50W	850g

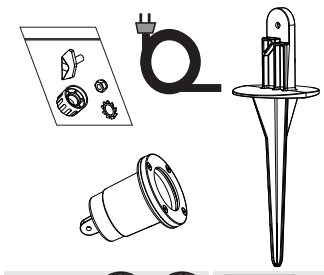

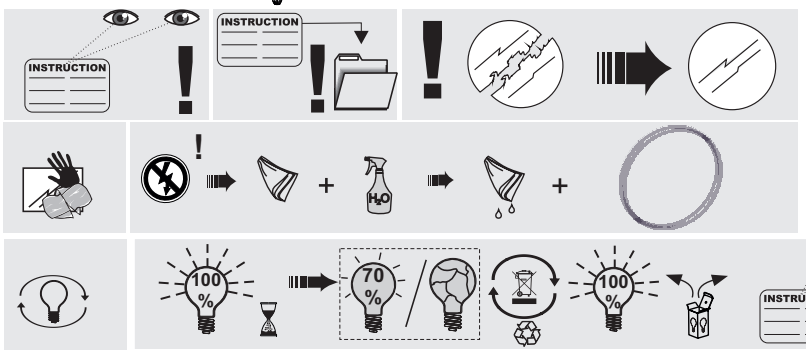

www.rzb.de

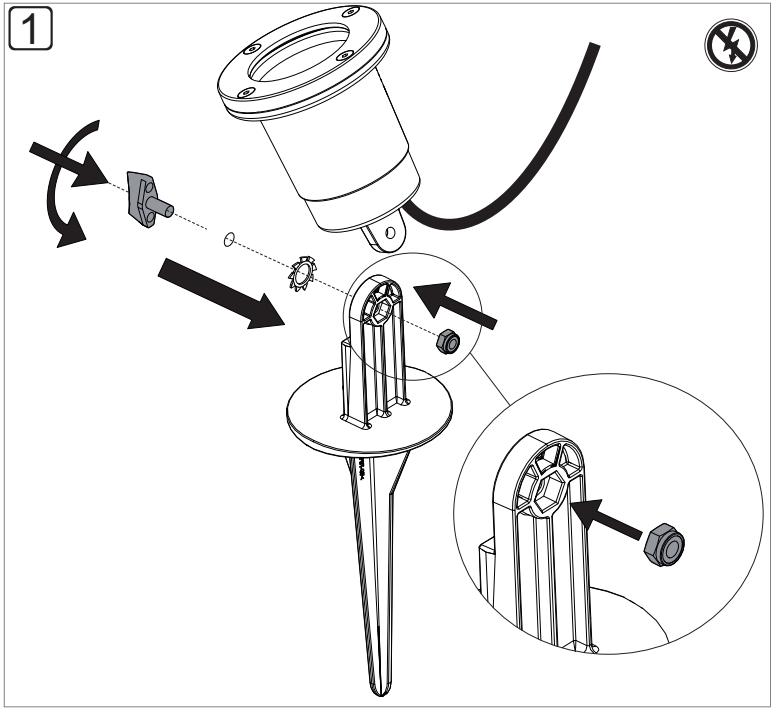
1

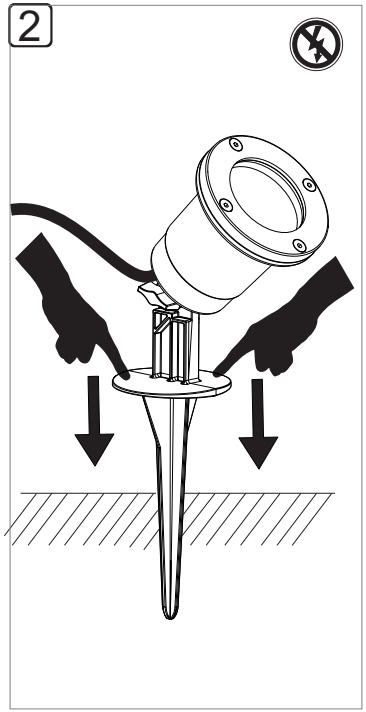
2

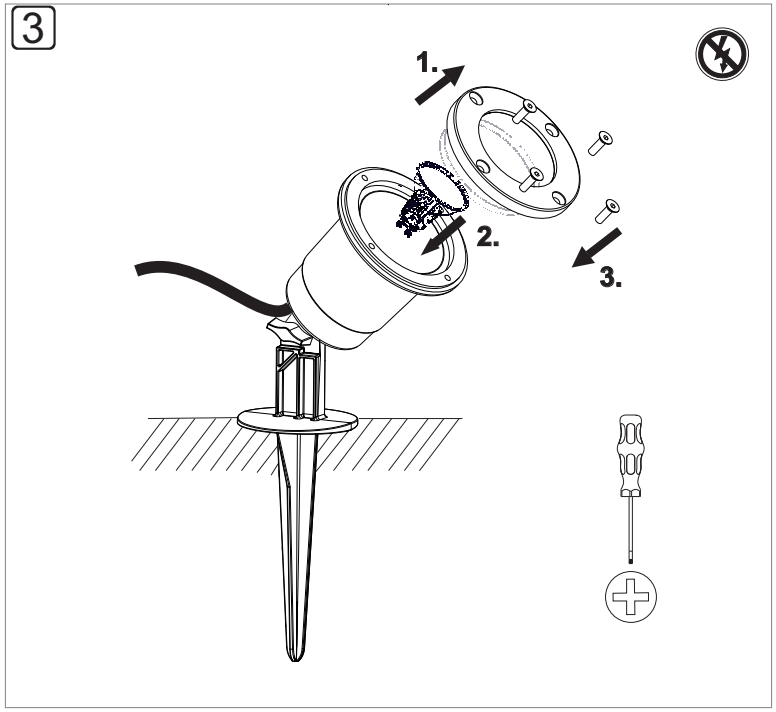
3
1.
2.
3.

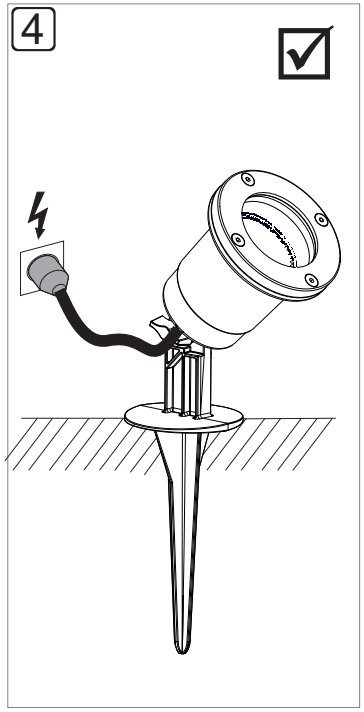
4

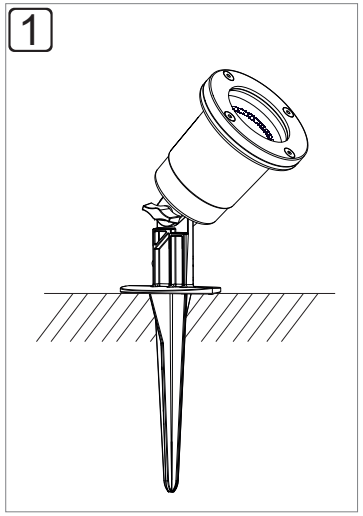
1

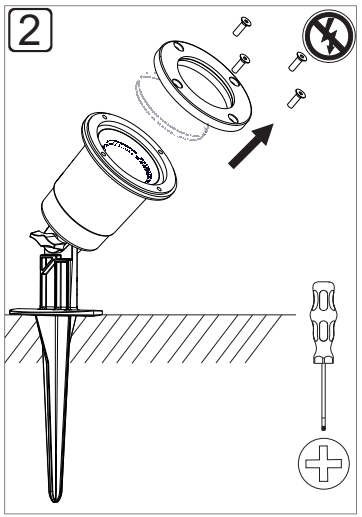
2

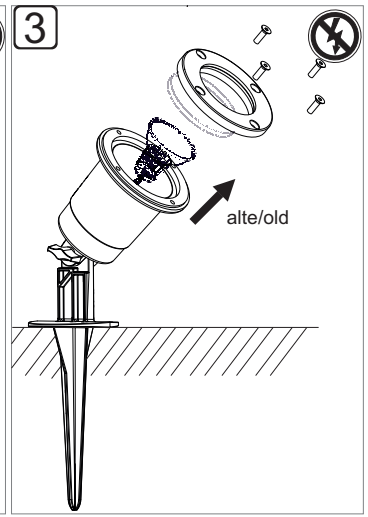
3
alte/old

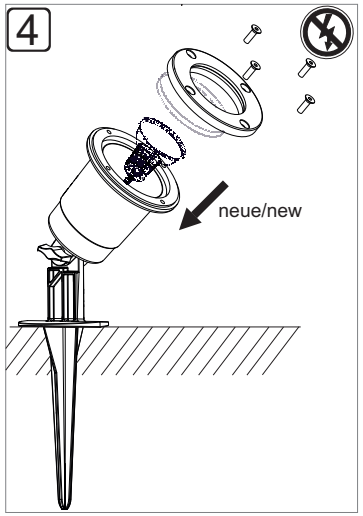
4
neue/new

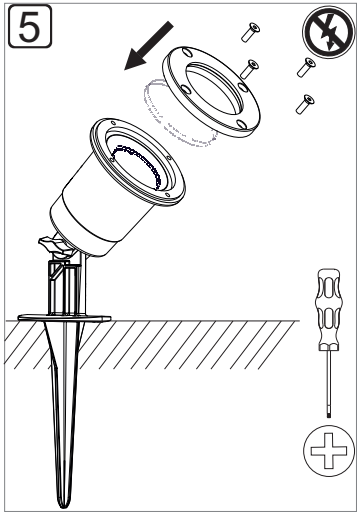
5

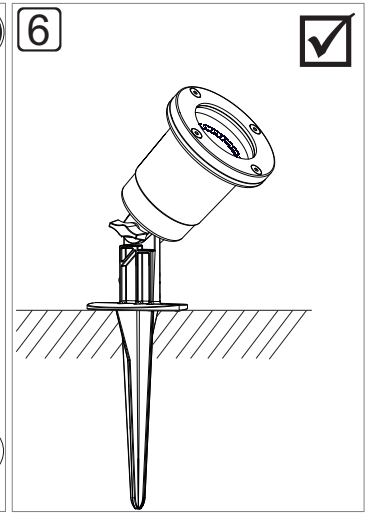
6

