BRUMBERG

DULAN LED recessed downlight
Article no. 12095263

Light.
For Generations.

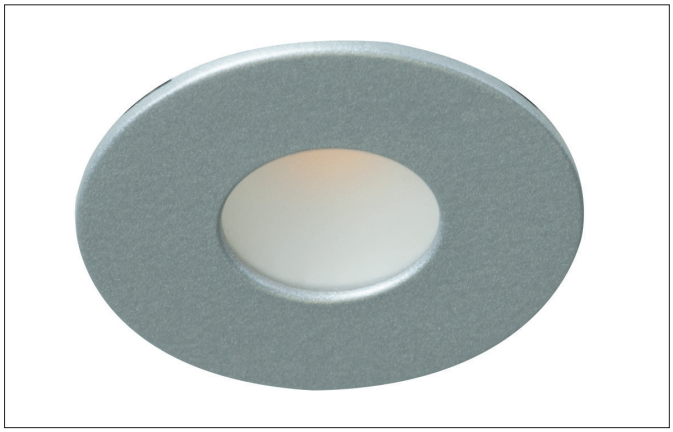

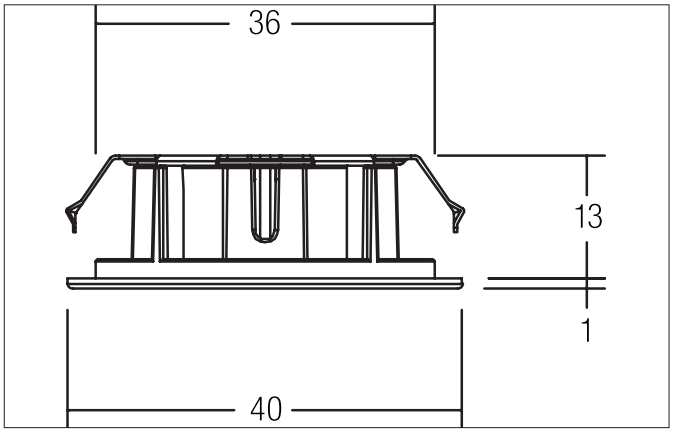

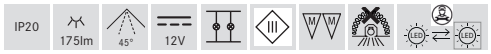

Tender
LED recessed downlight, Round.Toolless ceiling installation by leaf spring. Ceiling cut-out Ø 36 mm, Installation depth 13 mm, Outer diameter 40 mm, Weight 0,051 kg, with rotattionssymmetrical, deep, wide distributed light intensity. Cover plastic, satinised. Luminous flux 175 lm, Power 1 x 2 W, Light colour warm white, Correlated color temprature (CCT) 3.200 K, Colour rendering index CRI 81, Housing material: Aluminium / Plastic, Colour: Alu, Permissible ambient temperature (ta): -20 °C - +25 °C, Protection class (EN 61140): III, Degree of protection (DIN EN 60529): IP20. For connection to an external driver, which is not included in the scope of delivery of the luminaire. Depending on driver dimmable.

All technical data as well as, weight and measurements are based on rated values and had been carefully prepared. We reserve the right to make technical changes which are are important in progressing. Product pictures are examples and can vary from the original. Subject to errors.
Date 17.07.2024 Orders are placed under our general terms and conditions under https://www.brumberg.com/en/terms-and-conditions/general-terms-and-conditions-of-sale/

BRUMBERG

DULAN LED recessed downlight
Article no. 12095263

Light.
For Generations.

Article data	
Article no.	12095263
GTIN	4251433911340
Series name	DULAN
Short description	LED recessed downlight
Material	Aluminium / Plastic
Colour	Alu
Type of surface	Matt
Shape	Round
Outer diameter	40 mm
Built-in diameter_min	36 mm
Built-in diameter	36 mm
Installation depth	13 mm
Hight	1 mm
Scope of delivery	Including 2,000 mm connecting cable
Weight	0.051 kg
stamp	MM
Conformance	CE, UKCA

Lighting technology	
Colour temperature	3.200 K
Light colour	White
Light output	Direct
Luminous flux	175 lm
System efficiency	88 lm/W
Colour rendering	CRI 81
Reflector	Without
Beam angle	45°
Light sharing	Symmetric
Adjustable color temperature	No

Operating technology of the luminaire	
Voltage type	DC
DC nominal voltage max	12 V
Lamp	LED
Protection class	III
Degree of protection	IP20
Dimmable	Depending on type of control gear
Control	Depending on driver
Bulb change possible	The light source of this luminaire may only be replaced by the manufacturer or a service technician commissioned by him or a similarly qualified person.

Mounting technology	
Mounting method	Recessed mounting
Place of installation	Ceiling-mounted
Adjustability	Not adjustable
Further references	No cover with thermal insulation material
Material cover	Plastic, satinised

All technical data as well as, weight and measurements are based on rated values and had been carefully prepared. We reserve the right to make technical changes which are are important in progressing. Product pictures are examples and can vary from the original. Subject to errors.
Date 17.07.2024 Orders are placed under our general terms and conditions under https://www.brumberg.com/en/terms-and-conditions/general-terms-and-conditions-of-sale/

BRUMBERG

DULAN LED recessed downlight
Article no. 12095263

Light.
For Generations.

Packing data	
Gross weight	0.129 kg
Length of packaging	70 mm
Packaging width	47 mm
Packaging hight	81 mm
Disposal at end of life	This product must not be disposed of with household waste. You are obliged, to dispose of such electrical waste separately. By disposing of electrical waste and other old or defective electronics separately, you support recycling or other forms of re-use. In that way you help to take care and to avoid that harmful substances get into the environment.

Accessories	
	Article no.: 17106000 LED power supply 12 V DC, on/off switchable Power: 1 - 15 W Dimensions: 105 mm x 49 mm x 18 mm
	Article no.: 17110000 LED power supply 12 V DC, on/off switchable Power: 1 - 30 W Dimensions: 185 mm x 48 mm x 20 mm
	Article no.: 17107000 6-way distributor 12 V DC for 17106/17110 Leistung: 30 W
	Article no.: 17108000 Extension cable 12 V DC for 17106/17110/17107

All technical data as well as, weight and measurements are based on rated values and had been carefully prepared. We reserve the right to make technical changes which are are important in progressing. Product pictures are examples and can vary from the original. Subject to errors.
Date 17.07.2024 Orders are placed under our general terms and conditions under https://www.brumberg.com/en/terms-and-conditions/general-terms-and-conditions-of-sale/