BRUMBERG

ETMESA-S LED recessed downlight, IP54

Article no. 12267083

Light.
For Generations.



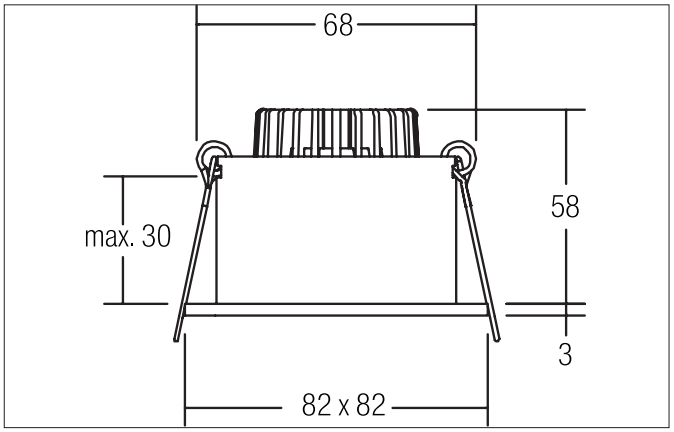

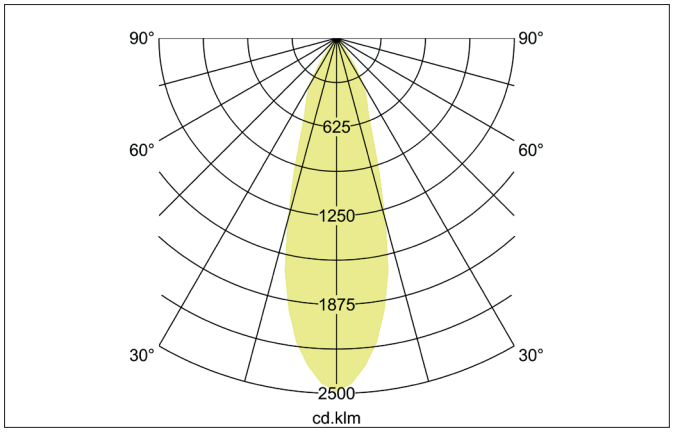



Tender
LED recessed downlight, IP54, Square.Toolless ceiling installation by installation springs. Ceiling cut-out Ø 68 mm, Installation depth 58 mm, Length 82 mm, Width 82 mm, Weight 0,185 kg, Reflector silver with rotattionssymmetrical, deep, wide distributed light intensity. Cover glass transparent. Luminous flux 680 lm, Power 1 x 6 W, Light colour warm white, Correlated color temprature (CCT) 2.700 K, Colour rendering index CRI > 80, Housing material: Aluminium / Glass, Colour: Black, Permissible ambient temperature (ta): -20 °C - +25 °C, Protection class (EN 61140): III, Degree of protection (DIN EN 60529): IP54 when installing in closed ceilings. For connection to an external driver, which is not included in the scope of delivery of the luminaire. Depending on driver dimmable.

Article data	
Article no.	12267083
GTIN	4250047785071
Series name	ETMESA-S
Short description	LED recessed downlight, IP54
Material	Aluminium / Glass
Colour	Black
Type of surface	Matt
Shape	Square
Built-in diameter	68 mm
Installation depth	58 mm
Length	82 mm
Width	82 mm
Hight	3 mm
Weight	0.185 kg
Conformance	CE, UKCA

All technical data as well as, weight and measurements are based on rated values and had been carefully prepared. We reserve the right to make technical changes which are are important in progressing. Product pictures are examples and can vary from the original. Subject to errors.
Date 12.09.2024 Orders are placed under our general terms and conditions under https://www.brumberg.com/en/terms-and-conditions/general-terms-and-conditions-of-sale/

BRUMBERG

ETMESA-S LED recessed downlight, IP54

Article no. 12267083

Light.
For Generations.

Lighting technology	
Colour temperature	2.700 K
Light colour	White
Light output	Direct
Luminous flux	680 lm
System efficiency	113 lm/W
Colour rendering	CRI > 80
Reflector	High-gloss
Reflector colour	silver
Beam angle	38°
Light sharing	Symmetric
Adjustable color temperature	No

Operating technology of the luminaire	
System output	6 W
Voltage type	DC
Current	350 mA
Lamp	LED
Lamp holder	Plug&Play
Protection class	III
Degree of protection	IP54
Protection class on the ceiling side	IP20
Dimmable	Depending on type of control gear
Control	Depending on driver
Bulb change possible	The light source of this luminaire may only be replaced by the manufacturer or a service technician commissioned by him or a similarly qualified person.

Mounting technology	
Mounting method	Recessed mounting
Place of installation	Ceiling-mounted
Adjustability	Not adjustable
Max. ceiling thickness	30 mm
Further references	No cover with thermal insulation material
Material cover	Glass transparent
Circlip	Without circlip

Packing data	
Gross weight	0.239 kg
Length of packaging	110 mm
Packaging width	95 mm
Packaging hight	80 mm
Disposal at end of life	This product must not be disposed of with household waste. You are obliged, to dispose of such electrical waste separately. By disposing of electrical waste and other old or defective electronics separately, you support recycling or other forms of re-use. In that way you help to take care and to avoid that harmful substances get into the environment.

All technical data as well as, weight and measurements are based on rated values and had been carefully prepared. We reserve the right to make technical changes which are are important in progressing. Product pictures are examples and can vary from the original. Subject to errors.
Date 12.09.2024 Orders are placed under our general terms and conditions under https://www.brumberg.com/en/terms-and-conditions/general-terms-and-conditions-of-sale/

BRUMBERG

ETMESA-S LED recessed downlight, IP54
Article no. 12267083

Light.
For Generations.

Accessories
Article no.: 17662000 LED converter 350 mA, on/off switchable Power: 1 - 7,2 W Dimensions: 68 mm x 35 mm x 21 mm https://www.brumberg.com/fileadmin/products/Datenblatt_17662000_2021_DE.pdf
Article no.: 17662010 LED converter 350 mA, on/off switchable Power: 1 - 7,2 W Dimensions: 68 mm x 35 mm x 21 mm https://www.brumberg.com/fileadmin/products/Datenblatt_17662010_2021_DE.pdf
Article no.: 17662020 LED converter 350 mA, on/off switchable Power: 1 - 7,2 W Dimensions: 68 mm x 35 mm x 21 mm https://www.brumberg.com/fileadmin/products/Datenblatt_17662020_2021_DE.pdf
Article no.: 17613000 LED converter 350 mA, on/off switchable Power: 1 - 15 W Dimensions: 115 mm x 34 mm x 19 mm https://www.brumberg.com/fileadmin/products/Datenblatt_17613000_2021_DE.pdf
Article no.: 17613010 LED converter 350 mA, on/off switchable Power: 1 - 15 W Dimensions: 115 mm x 34 mm x 19 mm https://www.brumberg.com/fileadmin/products/Datenblatt_17613010_2021_DE.pdf
Article no.: 17613020 LED converter 350 mA, on/off switchable Power: 1 - 15 W Dimensions: 115 mm x 34 mm x 19 mm https://www.brumberg.com/fileadmin/products/Datenblatt_17613020_2021_DE.pdf
Article no.: 17621000 LED converter 350 mA, on/off switchable Power: 1 - 21 W Dimensions: 128 mm x 50 mm x 13 mm https://www.brumberg.com/fileadmin/products/Datenblatt_17621000_2021_DE.pdf
Article no.: 17621010 LED converter 350 mA, on/off switchable Power: 1 - 21 W Dimensions: 128 mm x 50 mm x 13 mm https://www.brumberg.com/fileadmin/products/Datenblatt_17621010_2021_DE.pdf
Article no.: 17621020 LED converter 350 mA, on/off switchable Power: 1 - 21 W Dimensions: 128 mm x 50 mm x 13 mm https://www.brumberg.com/fileadmin/products/Datenblatt_17621020_2021_DE.pdf
Article no.: 17663000 LED converter 350 mA, trailing-edge phase dimmable Power: 2,8 - 7 W Dimensions: 110 mm x 50 mm x 19 mm https://www.brumberg.com/fileadmin/products/Datenblatt_17663000_2021_DE.pdf

All technical data as well as, weight and measurements are based on rated values and had been carefully prepared. We reserve the right to make technical changes which are are important in progressing. Product pictures are examples and can vary from the original. Subject to errors.
Date 12.09.2024 Orders are placed under our general terms and conditions under https://www.brumberg.com/en/terms-and-conditions/general-terms-and-conditions-of-sale/

BRUMBERG

ETMESA-S LED recessed downlight, IP54
Article no. 12267083

Light.
For Generations.

Accessories
Article no.: 17663010 LED converter 350 mA, trailing-edge phase dimmable Power: 2,8 - 7 W Dimensions: 110 mm x 50 mm x 19 mm https://www.brumberg.com/fileadmin/products/Datenblatt_17663010_2021_DE.pdf
Article no.: 17663020 LED converter 350 mA, trailing-edge phase dimmable Power: 2,8 - 7 W Dimensions: 110 mm x 50 mm x 19 mm https://www.brumberg.com/fileadmin/products/Datenblatt_17663020_2021_DE.pdf
Article no.: 17652000 LED-round converter 350 mA, trailing-edge phase dimmer Power: 4,9 - 7 W Dimensions: 51 mm x 24 mm https://www.brumberg.com/fileadmin/products/Datenblatt_17652000_2021_DE.pdf
Article no.: 17652020 LED-round converter 350 mA, trailing-edge phase dimmer Power: 4,9 - 7 W Dimensions: 51 mm x 24 mm https://www.brumberg.com/fileadmin/products/Datenblatt_17652020_2021_DE.pdf
Article no.: 17640000 LED converter 350 mA, trailing-edge phase dimmable Power: 4,2 - 10 W Dimensions: 102 mm x 38 mm x 21 mm https://www.brumberg.com/fileadmin/products/Datenblatt_17640000_2021_DE.pdf
Article no.: 17640010 LED converter 350 mA, trailing-edge phase dimmable Power: 4,2 - 10 W Dimensions: 102 mm x 38 mm x 21 mm https://www.brumberg.com/fileadmin/products/Datenblatt_17640010_2021_DE.pdf
Article no.: 17640020 LED converter 350 mA, trailing-edge phase dimmable Power: 4,2 - 10 W Dimensions: 102 mm x 38 mm x 21 mm https://www.brumberg.com/fileadmin/products/Datenblatt_17640020_2021_DE.pdf
Article no.: 17648000 LED converter 350 mA, trailing-edge phase dimmable Power: 0,7 - 17 W Dimensions: 166 mm x 46 mm x 34 mm https://www.brumberg.com/fileadmin/products/Datenblatt_17648000_2021_DE.pdf
Article no.: 17648010 LED converter 350 mA, trailing-edge phase dimmable Power: 0,7 - 17 W Dimensions: 166 mm x 46 mm x 34 mm https://www.brumberg.com/fileadmin/products/Datenblatt_17648010_2021_DE.pdf
Article no.: 17648020 LED converter 350 mA, trailing-edge phase dimmable Power: 0,7 - 17 W Dimensions: 166 mm x 46 mm x 34 mm https://www.brumberg.com/fileadmin/products/Datenblatt_17648020_2021_DE.pdf
Article no.: 17657000 LED converter 350 mA, 1-10 V dimmable (analog) Power: 5,2 - 18 W Dimensions: 110 mm x 52 mm x 22 mm https://www.brumberg.com/fileadmin/products/Datenblatt_17657000_2021_DE.pdf

All technical data as well as, weight and measurements are based on rated values and had been carefully prepared. We reserve the right to make technical changes which are are important in progressing. Product pictures are examples and can vary from the original. Subject to errors.
Date 12.09.2024 Orders are placed under our general terms and conditions under https://www.brumberg.com/en/terms-and-conditions/general-terms-and-conditions-of-sale/

BRUMBERG

ETMESA-S LED recessed downlight, IP54
Article no. 12267083

Light.
For Generations.

Accessories
Article no.: 17657010 LED converter 350 mA, 1-10 V dimmable (analog) Power: 5,2 - 18 W Dimensions: 110 mm x 52 mm x 22 mm https://www.brumberg.com/fileadmin/products/Datenblatt_17657010_2021_DE.pdf
Article no.: 17684000 LED converter 350 mA, DALI dimmable (digital) Power: 2,8 - 7 W Dimensions: 130 mm x 42 mm x 22 mm https://www.brumberg.com/fileadmin/products/Datenblatt_17684000_2021_DE.pdf
Article no.: 17684010 LED converter 350 mA, DALI dimmable (digital) Power: 2,8 - 7 W Dimensions: 130 mm x 42 mm x 22 mm https://www.brumberg.com/fileadmin/products/Datenblatt_17684010_2021_DE.pdf
Article no.: 17684020 LED converter 350 mA, DALI dimmable (digital) Power: 2,8 - 7 W Dimensions: 130 mm x 42 mm x 22 mm https://www.brumberg.com/fileadmin/products/Datenblatt_17684020_2021_DE.pdf
Article no.: 17658000 LED round converter 350 mA, DALI dimmable (digital) Power: 2,1 - 9 W Dimensions: 56 mm x 25 mm https://www.brumberg.com/fileadmin/products/Datenblatt_17658000_2021_DE.pdf
Article no.: 17658010 LED round converter 350 mA, DALI dimmable (digital) Power: 2,1 - 9 W Dimensions: 56 mm x 25 mm https://www.brumberg.com/fileadmin/products/Datenblatt_17658010_2021_DE.pdf
Article no.: 17658020 LED round converter 350 mA, DALI dimmable (digital) Power: 2,1 - 9 W Dimensions: 56 mm x 25 mm https://www.brumberg.com/fileadmin/products/Datenblatt_17658020_2021_DE.pdf
Article no.: 17683000 LED converter 350 mA, DALI dimmable (digital) Power: 3,5 - 17 W Dimensions: 110 mm x 52 mm x 22 mm https://www.brumberg.com/fileadmin/products/Datenblatt_17683000_2021_DE.pdf
Article no.: 17683010 LED converter 350 mA, DALI dimmable (digital) Power: 3,5 - 17 W Dimensions: 110 mm x 52 mm x 22 mm https://www.brumberg.com/fileadmin/products/Datenblatt_17683010_2021_DE.pdf
Article no.: 17683020 LED converter 350 mA, DALI dimmable (digital) Power: 3,5 - 17 W Dimensions: 110 mm x 52 mm x 22 mm https://www.brumberg.com/fileadmin/products/Datenblatt_17683020_2021_DE.pdf
Article no.: 17671000 LED converter 350mA, ZigBee dimmable Power: 3,5 - 18,5 W Dimensions: 146 mm x 44 mm x 30 mm https://www.brumberg.com/fileadmin/products/Datenblatt_17671000_2021_DE.pdf

All technical data as well as, weight and measurements are based on rated values and had been carefully prepared. We reserve the right to make technical changes which are are important in progressing. Product pictures are examples and can vary from the original. Subject to errors.
Date 12.09.2024 Orders are placed under our general terms and conditions under https://www.brumberg.com/en/terms-and-conditions/general-terms-and-conditions-of-sale/

BRUMBERG

ETMESA-S LED recessed downlight, IP54
Article no. 12267083

Light.
For Generations.

Accessories
Article no.: 17671010 LED converter 350mA, ZigBee dimmable Power: 3,5 - 18,5 W Dimensions: 146 mm x 44 mm x 30 mm https://www.brumberg.com/fileadmin/products/Datenblatt_17671010_2021_DE.pdf
Article no.: 17671020 LED converter 350mA, ZigBee dimmable Power: 3,5 - 18,5 W Dimensions: 146 mm x 44 mm x 30 mm https://www.brumberg.com/fileadmin/products/Datenblatt_17671020_2021_DE.pdf
Article no.: 17672000 LED converter 350mA, Casambi dimmable Power: 3,5 - 18,5 W Dimensions: 146 mm x 44 mm x 30 mm https://www.brumberg.com/fileadmin/products/Datenblatt_17672000_2021_DE.pdf
Article no.: 17672010 LED converter 350mA, Casambi dimmable Power: 3,5 - 18,5 W Dimensions: 146 mm x 44 mm x 30 mm https://www.brumberg.com/fileadmin/products/Datenblatt_17672010_2021_DE.pdf
Article no.: 17672020 LED converter 350mA, Casambi dimmable Power: 3,5 - 18,5 W Dimensions: 146 mm x 44 mm x 30 mm https://www.brumberg.com/fileadmin/products/Datenblatt_17672020_2021_DE.pdf
Article no.: 3835 Plug & Play extension lead 350 mA Dimensions: 500 mm https://www.brumberg.com/fileadmin/products/Datenblatt_00003835_2021_DE.pdf
Article no.: 3836 Plug & Play extension lead 350 mA Dimensions: 1,000 mm https://www.brumberg.com/fileadmin/products/Datenblatt_00003836_2021_DE.pdf
Article no.: 3837 Plug & Play extension lead 350 mA Dimensions: 2,000 mm https://www.brumberg.com/fileadmin/products/Datenblatt_00003837_2021_DE.pdf

All technical data as well as, weight and measurements are based on rated values and had been carefully prepared. We reserve the right to make technical changes which are are important in progressing. Product pictures are examples and can vary from the original. Subject to errors.
Date 12.09.2024 Orders are placed under our general terms and conditions under https://www.brumberg.com/en/terms-and-conditions/general-terms-and-conditions-of-sale/