BRUMBERG

LED converter 350 mA, DALI dimmable (digital)

Article no. 17685020

Light.
For Generations.



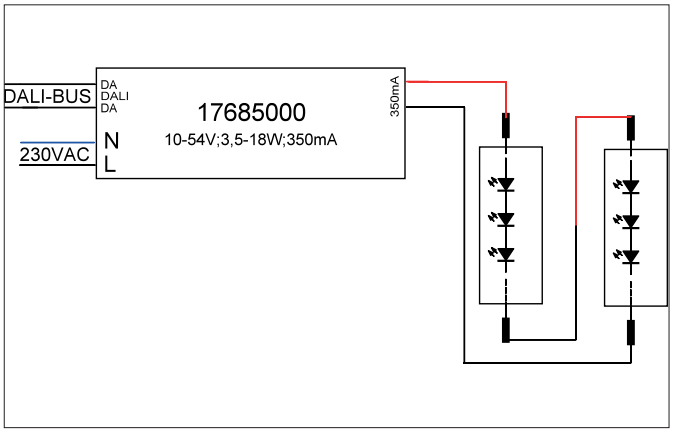

Tender
LED converter 350 mA, DALI dimmable (digital), , Rectangular.This converter is equipped with safety devices which protect it against over-voltage, short-circuit as well as thermal and electric overloads. The input and output terminals are suitable for cables with a cross-section of up to 0.75-1.5 mm². Material: Plastic, Degree of protection: according to DIN EN 60529 IP20, Protection class: (EN 61140) II, Current: 350 mA, Voltage: 230V AC 50Hz , Power: 18 W, Dimmable: Yes, Control: DALI-2 .

Article data	
Article no.	17685020
GTIN	4251433924005
Short description	LED converter 350 mA, DALI dimmable (digital)
Material	Plastic
Shape	Rectangular
Length	146 mm
Width	44 mm
Hight	30 mm
Scope of delivery	Plug&Play-Ausgangsleitung, Länge 110 mm und Anschlussbox
Weight	0.120 kg
stamp	ENEC 05, MM
Conformance	UKCA

All technical data as well as, weight and measurements are based on rated values and had been carefully prepared. We reserve the right to make technical changes which are are important in progressing. Product pictures are examples and can vary from the original. Subject to errors.
Date 13.09.2024 Orders are placed under our general terms and conditions under https://www.brumberg.com/en/terms-and-conditions/general-terms-and-conditions-of-sale/

BRUMBERG

LED converter 350 mA, DALI dimmable (digital)

Article no. 17685020

Light.
For Generations.

Operating technology of driver	
AC nominal voltage min	198 V
AC nominal voltage max	264 V
Frequency min	50 Hz
Frequency max	60 Hz
DC nominal voltage min	176 V
DC nominal voltage max	275 V
Protection class	II
Degree of protection	IP20
Power min	3.5 W
Power	18 W
Output_ripple_current	3
Starting current	5A 50µs
Suitable for emergency lighting	No
measure point (tc)	85 °C
Version	Plug&Play + connection box
Power factor	0.95
Output voltage max	54.00 V
Output voltage min	10.00 V
Control	DALI-2
Number of poles	4
Enviroment temprature (ta)	-25 °C up to +45 °C
Measure point (tc)	85 °C
Output current	350 mA

Packing data	
Gross weight	0.17 kg
Length of packaging	140 mm
Packaging width	110 mm
Packaging hight	120 mm
Disposal at end of life	This product must not be disposed of with household waste. You are obliged, to dispose of such electrical waste separately. By disposing of electrical waste and other old or defective electronics separately, you support recycling or other forms of re-use. In that way you help to take care and to avoid that harmful substances get into the environment.

All technical data as well as, weight and measurements are based on rated values and had been carefully prepared. We reserve the right to make technical changes which are are important in progressing. Product pictures are examples and can vary from the original. Subject to errors.
Date 13.09.2024 Orders are placed under our general terms and conditions under https://www.brumberg.com/en/terms-and-conditions/general-terms-and-conditions-of-sale/