BRUMBERG

CARYL Recessed spot, GX5,3
Article no. 2169.02

Light.
For Generations.



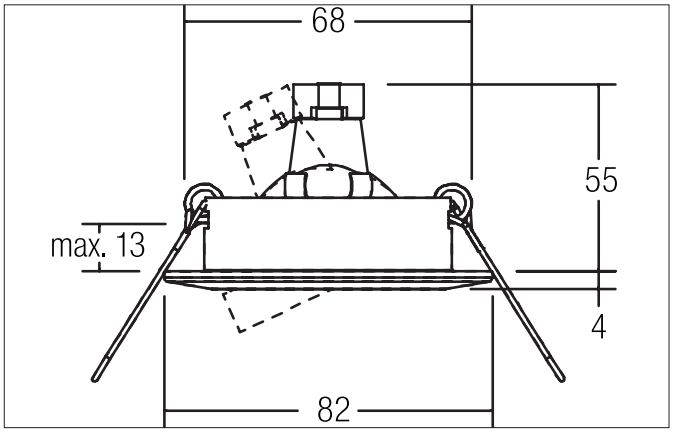

25° IP20 12V III LDT-Data

Tender
Recessed spot, GX5,3, glossy chrome, Round.In a compact design, for installation in tool-less rapid assembly systems.Lamp holder: GX5.3, Mounting method: Recessed mounting, Place of installation: Ceiling-mounted, Material: Aluminium, Degree of protection: according to DIN EN 60529 IP20, Protection class: (EN 61140) III, Voltage: 12V, Power: 13 W, Amount of light sources / fittings: 1 Qty, Adjustability: Pivoted, without control gear, Dimmable: Depending on type of control gear, Control: Depending on driver.

Product Benefits

- Recessed spotlight in round aluminum design for LED retrofit lamps with GX5.3 base.
- Ceiling cut-out 68 mm, diameter 82 mm, installation depth 55 mm, IP20.
- Pivoting range 25°.
- Version: with snap ring.
- Classic, formally restrained design.
- Also available in the same look as GU10 version, as a switchable and dimmable set set (trailing edge).

All technical data as well as, weight and measurements are based on rated values and had been carefully prepared. We reserve the right to make technical changes which are are important in progressing. Product pictures are examples and can vary from the original. Subject to errors.
Date 19.08.2024 Orders are placed under our general terms and conditions under https://www.brumberg.com/en/terms-and-conditions/general-terms-and-conditions-of-sale/

BRUMBERG

CARYL Recessed spot, GX5,3

Article no. 2169.02

Light.
For Generations.

Article data	
Article no.	2169.02
GTIN	4250047709510
Series name	CARYL
Short description	Recessed spot, GX5,3
Material	Aluminium
Colour	Chrome
Type of surface	Glossy
Shape	Round
Outer diameter	82 mm
Built-in diameter	68 mm
Installation depth	55 mm
Hight	4 mm
Weight	0.060 kg
Conformance	CE, UKCA

Operating technology of the luminaire	
System output	13 W
Voltage type	AC/DC
AC nominal voltage max	12 V
Frequency max	50 Hz
Lamp	For LED-retrofill lamp
Lamp holder	GX5.3
Protection class	III
Degree of protection	IP20
Dimmable	Depending on type of control gear
Control	Depending on driver
Bulb change possible	Yes

Mounting technology	
Mounting method	Recessed mounting
Place of installation	Ceiling-mounted
Adjustability	Pivoted
Swivel angle	25°
Max. ceiling thickness	13 mm
Further references	No cover with thermal insulation material
Material cover	Without cover
Circlip	With circlip

Packing data	
Gross weight	0.081 kg
Length of packaging	85 mm
Packaging width	43 mm
Packaging hight	84 mm
Disposal at end of life	This product must not be disposed of with household waste. You are obliged, to dispose of such electrical waste separately. By disposing of electrical waste and other old or defective electronics separately, you support recycling or other forms of re-use. In that way you help to take care and to avoid that harmful substances get into the environment.

All technical data as well as, weight and measurements are based on rated values and had been carefully prepared. We reserve the right to make technical changes which are are important in progressing. Product pictures are examples and can vary from the original. Subject to errors.
Date 19.08.2024 Orders are placed under our general terms and conditions under https://www.brumberg.com/en/terms-and-conditions/general-terms-and-conditions-of-sale/

BRUMBERG

CARYL Recessed spot, GX5,3
Article no. 2169.02

Light.
For Generations.

Compatible LED-modules						
Article no.	Power	Beam angle	Colour temperature	Luminous flux	Input	Hight LED-Modul
12925003	3 W	38°	2.700 K	290 lm	350 mA	40 mm
12926003	3 W	38°	3.000 K	310 lm	350 mA	40 mm
12925004	3 W	38°	4.000 K	340 lm	350 mA	40 mm
12923383	6 W	38°	2.700 K	740 lm	350 mA	32 mm
12923603	6 W	60°	2.700 K	720 lm	350 mA	32 mm
12924383	6 W	38°	3.000 K	730 lm	350 mA	32 mm
12924603	6 W	60°	3.000 K	770 lm	350 mA	32 mm
12924384	6 W	38°	3.500 K	730 lm	350 mA	32 mm
12924604	6 W	60°	3.500 K	770 lm	350 mA	32 mm
12923384	6 W	38°	4.000 K	770 lm	350 mA	32 mm
12923604	6 W	60°	4.000 K	790 lm	350 mA	32 mm
12920183	6 W	18°	3.000 K	740 lm	350 mA	31 mm
12920243	6 W	24°	3.000 K	760 lm	350 mA	31 mm
12920003	6 W	38°	3.000 K	780 lm	350 mA	31 mm
12920603	6 W	60°	3.000 K	760 lm	350 mA	31 mm
12920184	6 W	18°	4.000 K	780 lm	350 mA	31 mm
12920244	6 W	24°	4.000 K	790 lm	350 mA	31 mm
12920004	6 W	38°	4.000 K	810 lm	350 mA	31 mm
12920604	6 W	60°	4.000 K	780 lm	350 mA	31 mm
12963383	6 W	38°	3.000 K - 1.800 K	460 lm	350 mA	32 mm
12963603	6 W	60°	3.000 K - 1.800 K	460 lm	350 mA	32 mm
12953003	12 W	38°	2.700 K	1,130 lm	350 mA	70 mm
12954003	12 W	38°	3.000 K	1,360 lm	350 mA	70 mm
12954004	12 W	38°	3.500 K	1,290 lm	350 mA	70 mm
12953004	12 W	38°	4.000 K	1,300 lm	350 mA	70 mm
12965003	12 W	38°	3.000 K - 1.800 K	930 lm	350 mA	70 mm
12983003	12.5 W	38°	3.000 K	920 lm	350 mA	95 mm
12823003	8 W	60°	2.850 K	900 lm	24.00 V	50 mm
12843004	8 W	60°	2.000 K - 6.500 K	640 lm	24.00 V	50 mm
18438002	8 W	60°	RGB+WW	400 lm	24.00 V	50 mm
12929503	6.3 W	50°	2.700 K / 3.000 K / 4.000 K		350 mA	34 mm

All technical data as well as, weight and measurements are based on rated values and had been carefully prepared. We reserve the right to make technical changes which are are important in progressing. Product pictures are examples and can vary from the original. Subject to errors.
Date 19.08.2024 Orders are placed under our general terms and conditions under https://www.brumberg.com/en/terms-and-conditions/general-terms-and-conditions-of-sale/