BRUMBERG

BOWL-R LED recessed downlight

Article no. 12520074

Light.
For Generations.



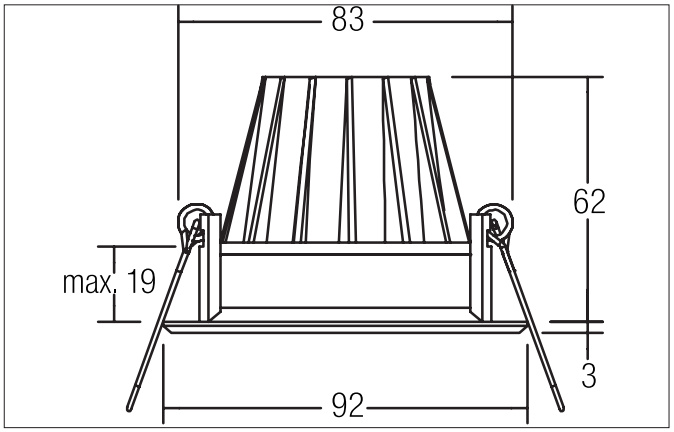

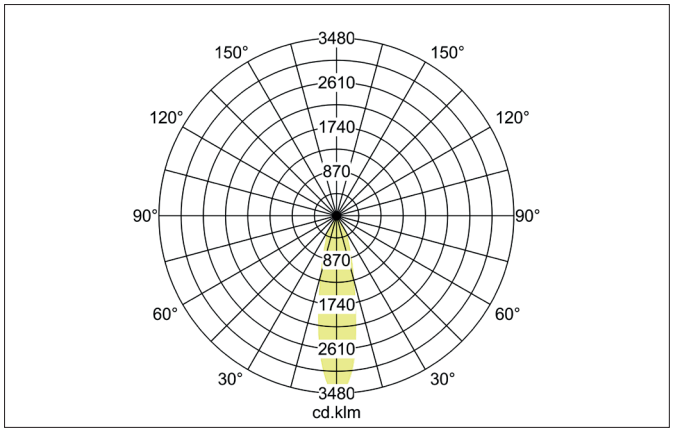



Tender
LED recessed downlight, Round.Toolless ceiling installation by installation springs. Ceiling cut-out Ø 83 mm, Installation depth 62 mm, Outer diameter 92 mm, Weight 0,145 kg, Reflector silver with rotattionssymmetrical, deep, wide distributed light intensity. Cover glass transparent. Luminous flux 660 lm, Power 1 x 7 W, Light colour neutral white, Correlated color temprature (CCT) 4.000 K, Colour rendering index CRI > 80, Rated life time L70/B50 at 25 °C: 50.000 h, Housing material: Aluminium / Glass, Colour: White, Permissible ambient temperature (ta): -20 °C - +25 °C, Protection class (EN 61140): III, Degree of protection (DIN EN 60529): IP20. For connection to an external driver, which is not included in the scope of delivery of the luminaire. Depending on driver dimmable.

Product Benefits

- Recessed downlight in round design made of solid aluminum.
- Ceiling cutout 83 mm, outer diameter 92 mm, recess depth 62 mm, luminous flux 630 / 660 lm, IP20.
- Recessed light emission for improved glare control
- Dimmable when using a suitable converter.
- Alternatively also available in square design.

All technical data as well as, weight and measurements are based on rated values and had been carefully prepared. We reserve the right to make technical changes which are are important in progressing. Product pictures are examples and can vary from the original. Subject to errors.
Date 26.08.2024 Orders are placed under our general terms and conditions under https://www.brumberg.com/en/terms-and-conditions/general-terms-and-conditions-of-sale/

BRUMBERG

BOWL-R LED recessed downlight

Article no. 12520074

Light.
For Generations.

Article data	
Article no.	12520074
GTIN	4251433917861
Series name	BOWL-R
Short description	LED recessed downlight
Material	Aluminium / Glass
Colour	White
Type of surface	Matt
Shape	Round
Outer diameter	92 mm
Built-in diameter	83 mm
Installation depth	62 mm
Hight	3 mm
Weight	0.145 kg
Conformance	CE, UKCA

Lighting technology	
Colour temperature	4.000 K
Light colour	White
Light output	Direct
Luminous flux	660 lm
System efficiency	94 lm/W
Colour rendering	CRI > 80
Reflector	High-gloss
Reflector colour	silver
Beam angle	30°
Light sharing	Symmetric
Adjustable color temperature	No

Operating technology of the luminaire	
Voltage type	DC
Current	700 mA
Lamp	LED
Lamp holder	Plug&Play
Protection class	III
Degree of protection	IP20
Dimmable	Depending on type of control gear
Control	Depending on driver
Bulb change possible	The light source of this luminaire may only be replaced by the manufacturer or a service technician commissioned by him or a similarly qualified person.
Rated life time L70/B50 at 25 °C	50,000 h

Mounting technology	
Mounting method	Recessed mounting
Place of installation	Ceiling-mounted
Adjustability	Not adjustable
Max. ceiling thickness	19 mm
Further references	No cover with thermal insulation material
Material cover	Glass transparent

All technical data as well as, weight and measurements are based on rated values and had been carefully prepared. We reserve the right to make technical changes which are are important in progressing. Product pictures are examples and can vary from the original. Subject to errors.
Date 26.08.2024 Orders are placed under our general terms and conditions under https://www.brumberg.com/en/terms-and-conditions/general-terms-and-conditions-of-sale/

BRUMBERG

BOWL-R LED recessed downlight
Article no. 12520074

Light.
For Generations.

Packing data	
Gross weight	0.269 kg
Length of packaging	165 mm
Packaging width	125 mm
Packaging hight	90 mm
Disposal at end of life	This product must not be disposed of with household waste. You are obliged, to dispose of such electrical waste separately. By disposing of electrical waste and other old or defective electronics separately, you support recycling or other forms of re-use. In that way you help to take care and to avoid that harmful substances get into the environment.

All technical data as well as, weight and measurements are based on rated values and had been carefully prepared. We reserve the right to make technical changes which are are important in progressing. Product pictures are examples and can vary from the original. Subject to errors.
Date 26.08.2024 Orders are placed under our general terms and conditions under https://www.brumberg.com/en/terms-and-conditions/general-terms-and-conditions-of-sale/

BRUMBERG

BOWL-R LED recessed downlight
Article no. 12520074

Light.
For Generations.

Accessories
Article no.: 17723000 LED converter 700 mA, on/off switchable Power: 1,4 - 31 W Dimensions: 146 mm x 43.5 mm x 30 mm https://www.brumberg.com/fileadmin/products/Datenblatt_17723000_2021_DE.pdf
Article no.: 17723010 LED converter 700 mA, on/off switchable Power: 1,4 - 31 W Dimensions: 146 mm x 43.5 mm x 30 mm https://www.brumberg.com/fileadmin/products/Datenblatt_17723010_2021_DE.pdf
Article no.: 17723020 LED converter 700 mA, on/off switchable Power: 1,4 - 31 W Dimensions: 146 mm x 43.5 mm x 30 mm https://www.brumberg.com/fileadmin/products/Datenblatt_17723020_2021_DE.pdf
Article no.: 17746000 LED converter 700 mA, trailing-edge phase dimmable Power: 11,2 - 20 W Dimensions: 110 mm x 52 mm x 22 mm https://www.brumberg.com/fileadmin/products/Datenblatt_17746000_2021_DE.pdf
Article no.: 17746010 LED converter 700 mA, trailing-edge phase dimmable Power: 11,2 - 20 W Dimensions: 110 mm x 52 mm x 22 mm https://www.brumberg.com/fileadmin/products/Datenblatt_17746010_2021_DE.pdf
Article no.: 17746020 LED converter 700 mA, trailing-edge phase dimmable Power: 11,2 - 20 W Dimensions: 110 mm x 52 mm x 22 mm https://www.brumberg.com/fileadmin/products/Datenblatt_17746020_2021_DE.pdf
Article no.: 17748000 LED converter 700 mA, trailing-edge phase dimmable Power: 1,4 - 32 W Dimensions: 166 mm x 46 mm x 34 mm https://www.brumberg.com/fileadmin/products/Datenblatt_17748000_2021_DE.pdf
Article no.: 17748010 LED converter 700 mA, trailing-edge phase dimmable Power: 1,4 - 32 W Dimensions: 166 mm x 46 mm x 34 mm https://www.brumberg.com/fileadmin/products/Datenblatt_17748010_2021_DE.pdf
Article no.: 17748020 LED converter 700 mA, trailing-edge phase dimmable Power: 1,4 - 32 W Dimensions: 166 mm x 46 mm x 34 mm https://www.brumberg.com/fileadmin/products/Datenblatt_17748020_2021_DE.pdf
Article no.: 17767000 LED converter 700 mA, 1-10 V dimmable (analog) Power: 2,1 - 20 W Dimensions: 110 mm x 52 mm x 22 mm https://www.brumberg.com/fileadmin/products/Datenblatt_17767000_2021_DE.pdf

All technical data as well as, weight and measurements are based on rated values and had been carefully prepared. We reserve the right to make technical changes which are are important in progressing. Product pictures are examples and can vary from the original. Subject to errors.
Date 26.08.2024 Orders are placed under our general terms and conditions under https://www.brumberg.com/en/terms-and-conditions/general-terms-and-conditions-of-sale/

BRUMBERG

BOWL-R LED recessed downlight
Article no. 12520074

Light.
For Generations.

Accessories
Article no.: 17767010 LED converter 700 mA, 1-10 V dimmable (analog) Power: 2,1 - 20 W Dimensions: 110 mm x 52 mm x 22 mm https://www.brumberg.com/fileadmin/products/Datenblatt_17767010_2021_DE.pdf
Article no.: 17767020 LED converter 700 mA, 1-10 V dimmable (analog) Power: 2,1 - 20 W Dimensions: 110 mm x 52 mm x 22 mm https://www.brumberg.com/fileadmin/products/Datenblatt_17767020_2021_DE.pdf
Article no.: 17777000 LED converter 700 mA, 1-10 V dimmable (analog) Power: 7 - 36 W Dimensions: 146 mm x 43.5 mm x 30 mm https://www.brumberg.com/fileadmin/products/Datenblatt_17777000_2021_DE.pdf
Article no.: 17777010 LED converter 700 mA, 1-10 V dimmable (analog) Power: 7 - 36 W Dimensions: 146 mm x 43.5 mm x 30 mm https://www.brumberg.com/fileadmin/products/Datenblatt_17777010_2021_DE.pdf
Article no.: 17758000 LED round converter 700 mA, DALI dimmable (digital) Power: 4,2 - 9 W Dimensions: 56 mm x 25 mm https://www.brumberg.com/fileadmin/products/Datenblatt_17758000_2021_DE.pdf
Article no.: 17758010 LED round converter 700 mA, DALI dimmable (digital) Power: 4,2 - 9 W Dimensions: 56 mm x 25 mm https://www.brumberg.com/fileadmin/products/Datenblatt_17758010_2021_DE.pdf
Article no.: 17758020 LED round converter 700 mA, DALI dimmable (digital) Power: 4,2 - 9 W Dimensions: 56 mm x 25 mm https://www.brumberg.com/fileadmin/products/Datenblatt_17758020_2021_DE.pdf
Article no.: 17783000 LED converter 700 mA, DALI dimmable, (digital) Power: 2,1 - 20 W Dimensions: 110 mm x 52 mm x 22 mm https://www.brumberg.com/fileadmin/products/Datenblatt_17783000_2021_DE.pdf
Article no.: 17783010 LED converter 700 mA, DALI dimmable, (digital) Power: 2,1 - 20 W Dimensions: 110 mm x 52 mm x 22 mm https://www.brumberg.com/fileadmin/products/Datenblatt_17783010_2021_DE.pdf
Article no.: 17783020 LED converter 700 mA, DALI dimmable, (digital) Power: 2,1 - 20 W Dimensions: 110 mm x 52 mm x 22 mm https://www.brumberg.com/fileadmin/products/Datenblatt_17783020_2021_DE.pdf
Article no.: 17788000 LED converter 700 mA, DALI dimmable (digital) Power: 7 - 38 W Dimensions: 146 mm x 44 mm x 30 mm https://www.brumberg.com/fileadmin/products/Datenblatt_17788000_2021_DE.pdf

All technical data as well as, weight and measurements are based on rated values and had been carefully prepared. We reserve the right to make technical changes which are are important in progressing. Product pictures are examples and can vary from the original. Subject to errors.
Date 26.08.2024 Orders are placed under our general terms and conditions under https://www.brumberg.com/en/terms-and-conditions/general-terms-and-conditions-of-sale/

BRUMBERG

BOWL-R LED recessed downlight
Article no. 12520074

Light.
For Generations.

Accessories
Article no.: 17788010 LED converter 700 mA, DALI dimmable (digital) Power: 7 - 38 W Dimensions: 146 mm x 44 mm x 30 mm https://www.brumberg.com/fileadmin/products/Datenblatt_17788010_2021_DE.pdf
Article no.: 17788020 LED converter 700 mA, DALI dimmable (digital) Power: 7 - 38 W Dimensions: 146 mm x 44 mm x 30 mm https://www.brumberg.com/fileadmin/products/Datenblatt_17788020_2021_DE.pdf
Article no.: 17771000 LED converter 700mA, ZigBee dimmable Power: 7 - 36 W Dimensions: 146 mm x 44 mm x 30 mm https://www.brumberg.com/fileadmin/products/Datenblatt_17771000_2021_DE.pdf
Article no.: 17771010 LED converter 700mA, ZigBee dimmable Power: 7 - 36 W Dimensions: 146 mm x 44 mm x 30 mm https://www.brumberg.com/fileadmin/products/Datenblatt_17771010_2021_DE.pdf
Article no.: 17771020 LED converter 700mA, ZigBee dimmable Power: 7 - 36 W Dimensions: 146 mm x 44 mm x 30 mm https://www.brumberg.com/fileadmin/products/Datenblatt_17771020_2021_DE.pdf
Article no.: 17772000 LED converter 700mA, Casambi dimmable Power: 7 - 38 W Dimensions: 146 mm x 44 mm x 30 mm https://www.brumberg.com/fileadmin/products/Datenblatt_17772000_2021_DE.pdf
Article no.: 17772010 LED converter 700mA, Casambi dimmable Power: 7 - 38 W Dimensions: 146 mm x 44 mm x 30 mm https://www.brumberg.com/fileadmin/products/Datenblatt_17772010_2021_DE.pdf
Article no.: 17772020 LED converter 700mA, Casambi dimmable Power: 7 - 38 W Dimensions: 146 mm x 44 mm x 30 mm https://www.brumberg.com/fileadmin/products/Datenblatt_17772020_2021_DE.pdf
Article no.: 17782000 LED converter 700 mA, DALI dimmable, (digital) Power: 3,5 - 38 W Dimensions: 146 mm x 43.5 mm x 22 mm https://www.brumberg.com/fileadmin/products/Datenblatt_17782000_2021_DE.pdf
Article no.: 17782010 LED converter 700 mA, DALI dimmable, (digital) Power: 3,5 - 38 W Dimensions: 146 mm x 43.5 mm x 22 mm https://www.brumberg.com/fileadmin/products/Datenblatt_17782010_2021_DE.pdf
Article no.: 17782020 LED converter 700 mA, DALI dimmable, (digital) Power: 3,5 - 38 W Dimensions: 146 mm x 43.5 mm x 22 mm https://www.brumberg.com/fileadmin/products/Datenblatt_17782020_2021_DE.pdf

All technical data as well as, weight and measurements are based on rated values and had been carefully prepared. We reserve the right to make technical changes which are are important in progressing. Product pictures are examples and can vary from the original. Subject to errors.
Date 26.08.2024 Orders are placed under our general terms and conditions under https://www.brumberg.com/en/terms-and-conditions/general-terms-and-conditions-of-sale/

BRUMBERG

BOWL-R LED recessed downlight
Article no. 12520074

Light.
For Generations.

Accessories
Article no.: 3838 Plug & Play extension lead 700 mA Dimensions: 500 mm https://www.brumberg.com/fileadmin/products/Datenblatt_00003838_2021_DE.pdf
Article no.: 3839 Plug & Play extension lead 700 mA Dimensions: 1,000 mm https://www.brumberg.com/fileadmin/products/Datenblatt_00003839_2021_DE.pdf
Article no.: 3840 Plug & Play extension lead 700 mA Dimensions: 2,000 mm https://www.brumberg.com/fileadmin/products/Datenblatt_00003840_2021_DE.pdf

All technical data as well as, weight and measurements are based on rated values and had been carefully prepared. We reserve the right to make technical changes which are are important in progressing. Product pictures are examples and can vary from the original. Subject to errors.
Date 26.08.2024 Orders are placed under our general terms and conditions under https://www.brumberg.com/en/terms-and-conditions/general-terms-and-conditions-of-sale/